Development Ordinance

ORDINANCE NUMBER 2008-O-47

passed August 5, 2008

ORDINANCE NUMBER 2011-O-43

Amended August 16, 2011

ORDINANCE NUMBER 2011-O-67

Amended November 15, 2011

VILLAGE OF WAUCONDA

101 N. Main Street, Wauconda, IL 60084

BUILDING, ZONING & PLANNING DEPARTMENT

109 W. Bangs Street, Wauconda, IL 60084

Phone: 847-526-9609 Fax: 847-526-8967

DEVELOPMENT ORDINANCE INDEX

SECTION TITLE PAGE

1.0. Title and Table of Contents. 4

2.0. Purpose. 4

3.0. Applicability and General Provisions 4

3.1. Jurisdiction. 4

3.2. Application. 4

3.3. Definitions. 4

3.4. Abbreviations. 10

3.5. Interpretation and exceptions. 11

3.6. Enforcement. 12

3.7. Violations and penalties. 12

3.8. Building and occupancy permits. 12

4.0. Development Documentation and Procedures 15

4.1. General. 15

4.2. Conceptual Planning Stage Documentation 16

4.3. Conceptual Planning Stage Procedures. 17

4.4. Preliminary Planning Stage Documentation. 18

4.5. Preliminary Planning Stage Procedures. 21

4.6. Final Planning Stage Documentation. 24

4.7. Final Planning Stage Procedures. 27

4.8. Construction Stage Documentation. 28

4.9. Construction Stage Procedures. 29

5.0. Development Standards and Specifications. 30

5.1. General Provisions. 30

5.1.1. Public Improvements. 31

5.1.2. Private Improvements. 31

5.2. Separability. 33

5.3. Construction, Design and Installation Standards For Improvements. 33

5.3.1. Site Development, Grading, Erosion, Sedimentation, and Dust Control. 34

5.3.2. Right-of-Way, Development, and Subdivision 35

5.3.3. Sanitary Sewer System. 44

5.3.4. Stormwater Drainage and Storage Facilities. 51

5.3.5. Water Distribution System. 54

5.3.6. Street Lighting Improvements. 62

5.3.7. Public Utilities. 62

5.3.8. Landscaping. 63

5.3.9. Bench Marks and Monuments. 67

5.3.10. Repair and/or Replacement of Utilities 67

5.3.11. Maintenance of Required Utilities. 67

6.0. Construction Improvement Approval/Village Approval of Completed Improvements. 67

6.1. Preconstruction Meeting. 67

6.2. Construction Inspection Procedures. 68

6.3. Final Inspection Procedures. 68

6.4. Acceptance of Improvements by Village..... 69

LIST OF ILLUSTRATIONS 70

DEVELOPMENT ORDINANCE

1.0. *Title and Table of Contents.*

This ordinance shall be known and may be cited or referred to as "Development Ordinance of the Village of Wauconda".

2.0. *Purpose.*

Subdivision and/or development of land is a privilege conferred upon the developer by the laws of the State of Illinois and by this Ordinance. It is the responsibility of the Village of Wauconda to regulate the development of lands in and around the Village for the following purposes:

- To protect and promote the health, safety, and general welfare of the people of the Village, the people of the surrounding area, and of the people visiting or passing through the Village.
- To leave for future generations a well-thought-out and well-constructed infrastructure so that the focus of citizen concern is not past error but future growth.
- To promote the orderly development of property so that such development enhances and complements existing Village features.
- To ensure that development proceeds in a timely manner.

3.0. *Applicability and General Provisions.*

3.1. *Jurisdiction.*

This development ordinance shall apply to improvements constructed on all lands within the Village of Wauconda and to improvements constructed on all contiguous, unincorporated land within 1 1/2 miles of the corporate limits of the Village.

3.2. *Application.*

- The following persons, corporations, firms, etc., shall be required to comply with this development ordinance:
- Anyone contemplating the subdivision or resubdivision of land or a planned unit development.
- Anyone contemplating the development of property as noted above pursuant to an annexation.
- Any project designated by the Village Administrator.

3.3. *Definitions.*

The following terms shall have the following respective meanings as used in this development ordinance:

Agent. A person and/or corporation, etc., acting for and/or in the stead of another person.

Alley. The public right-of-way which affords secondary means of access to properties abutting upon a street.

Applicant. The person, corporation, firm, etc., seeking to develop a property under this development ordinance.

Area, Gross. The gross area of a parcel or development is the total area (in acres) in fee ownership, which excludes right-of-way already dedicated but includes non-residential land uses and private streets.

Area, Net. The net area of a parcel or development is the area (in acres) of the actual tract of land upon which the dwelling units are proposed to be located. This area shall include the site for all principal and accessory building(s) and associated parking area, but does not include common open space or recreational facilities, or the vehicular circulation system, either private or public.

Bench. The concrete formed into the bottom of a structure such as a manhole to conduct sewage or other liquids across the structure so that the flow is as little disturbed as possible.

Benchmark. A permanent or semi-permanent physical mark of known elevation referenced to a recognized datum.

Block. A block is a tract of land bounded by street rights-of-way, or by a combination of street rights-of-way and public parks, cemeteries, railroad and utility rights-of-way, bulkhead lines or shore lines of waterways, or corporate boundary lines.

Building. A building is an enclosed structure, constructed partially or wholly above ground, with a permanent roof, separated on all sides from adjacent open space by exterior or party walls, which is permanently affixed to the ground.

Building setback line. A line indicating the minimum horizontal distance between any property line and a building on the property.

Comprehensive Plan. The "Official Comprehensive Plan" shall be defined as a compilation of policy statements; goals; standards; maps recommended planning, regulatory, fiscal and public works programs; together with pertinent data relative to the past, present and future trends of the Village with respect to its population, housing, economic, social and environmental development matters; its land, water and natural resources and use; its transportation facilities, public facilities and utilities; and any other matter relative to the present and future patterns of life within the Village or within one and one half miles (1½) of its boundaries as they may from time to time exist, prepared and recommended by the Village Plan Commission with the advice and assistance of the Village Administrator and staff and adopted by the Village Board of Trustees by ordinance duly enacted, together with such amendments thereto as may be adopted from time to time. Said term shall also refer to any internally consistent and complete portion of such a compilation relating to any one or more of the aforesaid subjects or to any specific portion of the aforesaid geographical area. As of the effective date of this Code, said term shall be understood to refer to the current Comprehensive Plan, which may be amended from time to time.

Construction cost. Estimated cost of construction excluding engineering costs and excluding required Village fees based on construction cost.

County. Pertaining to the County of Lake, Illinois. ***Crosswalk***. A public right-of-way located across a block to provide pedestrian access to adjacent streets or alleys.

Cul-de-sac. A street permanently terminated by a vehicle turn-around.

Detention basin. A covered or uncovered reservoir designed to hold an accumulation of storm water runoff so as to reduce peak flow in a storm water drainage system.

Developer. A person, group of persons, organization, or other entity who petitions the Village according to this development ordinance for the purpose of improving or subdividing land; may also be referred to as "owner" or "applicant" depending on the context.

Development. Any subdivision or change to improved or unimproved real property including single lots and shall not be limited to buildings or other structures, mining, dredging, filling, grading, paving, excavation or drilling operations located within the planning jurisdiction of the Village.

Development Ordinance. This ordinance.

Development plan. The documentation, both written and diagrammatic, which sets forth the improvements proposed for any given lot or tract.

Drainage swale. A drainage ditch of shallow depth with small side slopes.

Dwelling unit. One or more rooms which, taken together, are intended as living quarters for an individual or group of individuals, a single family or for a group of people living together as a family or as a single housekeeping unit.

Easement. A grant by a property owner for the use of a portion of said owner's property by another person or other legal entity or the general public for a specified purpose or purposes.

Elevation. The vertical distance of an existing point from a stated datum plane.

Enforcement Officer. The following sworn appointed Public Officers, or their designees, for the Village of Wauconda: Village Administrator, Chief of Police, Director of Building, Zoning & Economic Development, Director of Public Works, Director of Environmental Quality, Fire Marshall and Village Engineer.

Engineer. An Illinois-licensed professional engineer.

Engineer, Village. The engineer or engineering firm designated by the Village to administer the engineering activities of the Village.

Fill. Any act by which earth, sand, gravel, rock, or other material is deposited, placed, replaced, pushed, dumped, pulled, transported or moved to a new location and shall include the conditions resulting there from.

Frontage. That portion of a property abutting a right-of-way along what would be considered the front yard.

Geographic Information System (GIS). A system for managing spatially referenced data (map features) and associated attributes (database records). It is a computer program capable of integrating, storing, editing, analyzing, and displaying geographically-referenced information. GIS is a “smart map” tool that allows users to create interactive searches, analyze the spatial information, simplify and improve the decision-making process, thematically display results (by color or through symbols), and edit data.

Grade. The slope of land, road, street, or other public way expressed in percent.

Gradient. Change in vertical distance per change in horizontal distance; usually expressed as a percentage (e.g., "0.40%" where rise equals 0.40 percent of run).

Heritage Tree. Any non-evasive tree twenty-five inches (25”), or larger in diameter.

Highway. The entire width between the boundary lines of every way publicly maintained when any part thereof is open to the use of the public for purposes of vehicular travel or located on public school property.

Improvements. Grading, street surfacing, curbs, gutters, side-walks, water mains, fire hydrants, sanitary sewers, storm sewers, culverts, trees, bushes, landscaping and other additions to the natural state of land which increase its value, utility or habitability in accordance with the provisions of these Development Standards.

- **Private Improvements**

  Any installed or constructed facility for which the responsibility of maintenance and ownership will be retained by the owner or a homeowners’ or property owners’ association or any other private entity or private organization.

- **Private Common Improvements**

  Any installed or constructed facility for which the responsibility of maintenance and/or ownership will be retained by the homeowner, a property owners' association or any other private entity. This includes amenities such as, swimming pools, tennis courts, parks, etc.

- **Public Improvements**

  Any structure, facility, mechanism or improvement designed, constructed or installed which is required to be dedicated, granted or given to the Village or other public entity for use, ownership, operation and maintenance. Public Improvement may include a structure, facility, mechanism or improvement which is constructed for the use and benefit of the general public.

Inspection. Activity of the State, Village, owner, or developer, or their agents to verify the compliance of construction of all improvements required under the Development Ordinance or other regulations, ordinances, agreements, etc., for conformity with the plans and specifications. Under no circumstances are inspections to imply supervision or control of the work, nor are inspections to imply control of the means and methods used in performing the work.

Inspector. An agent of the State, Village or developer or owner whose sole duty it is to verify, not ensure, the compliance of construction of publicly financed improvements with State or Village rules, regulations, ordinances, agreements, etc., and with these plans and specifications; not to be confused with "supervisor".

Lot. A parcel of land comprising one unit of the several that are created in the recorded division, subdivision, or resubdivision of land. Lot shall include a Zoning Lot as that term is defined in the Zoning Ordinance.

Lot, corner. A lot situated at the intersection of two (2) or more streets, where the interior angle of such intersection coterminous with the right-of-way lines of such streets does not exceed one hundred thirty-five degrees (135°).

Lot, through. A lot having frontage on two (2) parallel or approximately parallel streets, and which is not a corner lot. On a through lot, both street lines shall be deemed front lines.

Official map. The current zoning map.

Outlot. A lot that shall not be developed but is reserved for a specific purpose or purposes.

Owner. Any individual, firm, association, partnership, corporation, trust, or any other legal entity having sufficient propri-etary interest in the land sought to be subdivided or developed to commence and maintain proceedings to subdivide the same under these Development Standards.

Parcel. A continuous area or acreage of land which can be described as provided for in the Plats Act of the Illinois Compiled Statutes.

Parkway. The part of the public street right-of-way not occupied by the street pavement and located between the back of the curb and the sidewalk as well as the dividing strip of a roadway.

Pavement. The portion of a street or access easement intended to bear vehicular traffic, not including curbs.

Plan Commission. The words "Plan Commission" as used herein, refer to the Plan Commission of the Village of Wauconda, Illinois.

Planned Unit Development (PUD). A Planned Unit Development is, for the purposes of this Development Ordinance, a subdivision whether or not it is divided into two (2) or more parts.

A PUD is a parcel of and or contiguous parcels of land of a size sufficient to create its own character controlled by a single landowner or by a group of landowners in common agreement as to control, to be

developed as a single entity; the character of which is compatible with adjacent parcels, and the intent of the zoning district or districts in which it is located; the developers may be granted relief from specific land use regulations and design standards, and may be granted a variation(s) in return for assurances of an overall quality of development, including any specific features which will be of exceptional benefit to the community as a whole and which would not otherwise be required by the Zoning Ordinance.

The area of a Planned Unit Development shall remain under one ownership or unified control unless safeguards are provided that, in the opinion of the Plan Commission, will provide for the continuation of the original Planned Development concept and as modified from time to time by the Plan Commission and approved by the Village Board. Reference current Zoning Ordinance for most recent PUD requirements.

Plans. Bound set of prints typically prepared by an engineer and/or architect or similar professional depicting the work to be done to fully construct the improvements proposed for a development.

Plat. A map or drawing generally depicting existing survey, topographical, or subdivision data.

Plat, final. A plat showing Village-approved survey or subdivision date.

Plat, preliminary. A plat showing proposed survey or subdivision data subject to Village approval.

Protective Covenants. Sometimes referred to as "Covenants, Conditions and Restrictions of Record." Protective Covenants also includes governance provisions of a declaration of town-home or condominium. Protective Covenants are restrictions and obligations, recorded against, and running with, the land which govern, among other things, the ownership, maintenance and operation of common elements, common drainage and detention facilities and which establish restrictions on private land use and create rights and obligations for the governance of the relevant property or unit owners' association. Protective Covenants also protect against the undesirable aspects of development which tend to diminish property values.

Resubdivision. The rearrangement of a portion of land previously subdivided, subject to the same constraints that apply to the subdivision.

Right-of-way. A general term denoting land, property, or interest therein, acquired for or used as a roadway, pedestrian way, bike path, railroad route, utility route, or other public or quasi-public use.

Road or roadway. That portion of a highway improved, designed or ordinarily used for vehicular travel, exclusive of the berm or shoulder. In the event a highway includes two or more separate roadways the term "roadway" as used herein shall refer to any such roadway separately but not to all such roadways collectively. (Source: P.A. 76-1586.)

Sewerage System. A system constructed to carry away storm or waste water and all appurtenances to that system.

Site. A lot or parcel of land or a contiguous combination thereof, where grading work is performed as a single unified operation.

Sidewalk. That portion of a street between the curb lines, or the lateral lines of a roadway, and the adjacent property lines, intended for use of pedestrians.

Slope. A gradient expressed as a ratio (e.g., "4:1").

Street. The entire width between the boundary lines of every way publicly maintained when any part thereof is open to the use of the public for purposes of vehicular travel.

Street, arterial. Streets and highways servicing major activity centers, the highest traffic volume corridors, the longest trip desires, and a high proportion of total urban area travel on a minimum of street

mileage. Service to abutting land is subordinate to the provisions of travel service to major traffic movements. This system carries the major portion of trips entering and leaving the Wauconda urban area as well as the majority of through movements desiring to bypass the Village.

Street, collector. Streets intended to collect and convey traffic from minor streets in the neighborhood and channel it into the arterial systems.

Street, intersection. The area common to two intersecting rights-of-way.

Street, frontage access. A minor street which is parallel and adjacent to arterial streets and which provides access to abutting properties and protection to local traffic from fast, through moving traffic on arterial streets.

Street, local. Streets not classified in a higher system, providing direct access to abutting land and access to the higher systems. They offer the lowest level of mobility and have limited continuity to discourage through-traffic.

Street, private. An undedicated street, generally within a Planned Development which is privately owned or maintained or an easement of access benefiting a dominant parcel.

Street, public. Any arterial, collector, or minor street which is shown on the subdivision plat and is or is to be dedicated to public use.

Subdivider. The person or persons responsible for preparing and recording the plats of the subdivision and for carrying out all appropriate requirements including responsibility for public improvements installation relating thereto as outlined in the Development Standards.

Subdivision. A subdivision is the division of land into two (2) or more lots or parcels, any of which is less than five (5) acres, for the purpose, whether immediate or future, of transfer of ownership or building development, including all public streets, ways for public service facilities, parks, playgrounds, school grounds, or other public grounds, and all the tracts, parcels, lots or blocks, and numbering of all such lots, blocks or parcels by progressive numbers, giving their precise dimensions. The term subdivision includes resubdivision, and, where it is appropriate to the context, relates to the process of subdivision or to the land subdivided, provided however, the following shall not be considered a subdivision but shall be in conformance with the requirements of the Development Standards and Specifications, where applicable.

- The division or subdivision of land into parcels or tracts of five (5) acres or more in size which does not involve any new streets or easements of access;
- The division of lots or blocks of less than one (1) acre in any recorded subdivision which does not involve any new streets or easements of access;
- The sale or exchange of parcels of land between owners of adjoining and contiguous land;
- The conveyance of parcels of land or interest therein for use as a right-of-way for railroads or other public utility facilities and other pipe lines which does not involve any new streets or easements of access;
- The conveyance of land owned by a railroad or other public utility which does not involve any new streets or easements of access;
- The conveyance of land for highway or other public purposes or grants or conveyances relating to the dedication of land for public use or instruments relating to the vacating of land impressed with a public use;
- Conveyance made to correct descriptions in prior conveyances;

- The sale or exchange of parcels or tracts of land following the division into no more than two (2) parts of a particular parcel or tract of land existing on July 17, 1959 and not involving any new streets or easements of access;
- The sale of a single lot of less than five (5) acres from a larger tract when a survey is made by a registered surveyor; provided, that this exemption shall not apply to the sale of any subsequent lots from the same larger tract of land, as determined by the dimensions and configuration of the larger tract on October 1, 1973, and provided also that this exemption does not invalidate any local requirements applicable to the subdivision of land. (See Plat Act, Illinois Compiled Statutes); and
- Wherever possible, Condominium and Town-home developments shall conform to the provisions of the Development Ordinance.

Utilities. Services provided by public or quasi-public agencies including but not limited to telephone communication, electrical power, natural gas, cable or satellite television signals, transportation, sanitary sewer, storm sewer, potable water, etc.

Village. The Village of Wauconda, Lake County, Illinois.

Village Board. The President and Board of Trustees of the Village of Wauconda, Lake County, IL

Village Engineer. The person or organization designated by the Village to administer the engineering activities of the Village.

Village Planner. The person or organization designated by the Village to administer the planning activities of the Village.

Zoning ordinance. The Zoning ordinance of the Village of Wauconda as last amended.

3.4. *Abbreviations.*

A.A.S.H.T.O. American Association of State Highway Transportation Officials.

A.N.S.I. American National Standards Institute.

A.S.T.M. American Society for Testing and Materials.

A.W.W.A. American Water Works Association.

D.I.P. Ductile Iron Pipe

D.O.T. Department of Transportation.

G.I.S. Geographic Information System.

H.D.P.E. High Density Polyethylene

I.B.R. Illinois Bearing Ratio.

I.D.N.R. Illinois Department of Natural Resources.

I.D.O.T. Illinois Department of Transportation.

I.E.P.A. Illinois Environmental Protection Agency.

L.C.D.O.T Lake County Department of Transportation.

L.O.C. Letter of Credit.

O.S.H.A. Occupational Safety and Health Administration.

O.W.R. Office of Water Resources.

P.U.D. Planned Unit Development

P.V.C. Polyvinyl Chloride Plastic.

Q. Quantity of Flow.

U.S.G.S. United States Geological Survey.

W.D.O. Watershed Development Ordinance.

3.5. ***Interpretation and exceptions.***

Any dispute arising from the interpretation of this development ordinance shall be resolved in favor of the Village interpretation. The Village Administrator shall be authorized to interpret this development ordinance. The Village Administrator's interpretation may be overruled by the Village Board.

a) Changes and/or alternative methods.

1. The Village staff and Village consultants will review and possibly permit changes and/or alternative methods to minor (as determined by the Village Administrator) portions of this development ordinance, based on difficulties encountered with aspects of development. The understanding is that the intent of these regulations, standards, and specifications shall not be compromised. The Village Board may overrule any changes and/or alternative methods granted or denied by the Village staff or by the Village consultants.

2. The Village Board shall review and decide proposed changes and/or alternative methods deemed by the Village Administrator, by the Plan Commission, or by the Village staff to be significant.

3. The developer shall request Village review of significant changes and/or alternative methods in writing.

4. The Village Board may conduct public meetings for significant changes and/or alternative methods.

b) Nothing contained in this development ordinance shall be interpreted to be a consent, license, or permit to use any property; to locate any building, structure, or facility; or to carry on any trade, industry, occupation, or activity.

c) In their interpretation and application, the provisions of this Ordinance shall be held to be the minimum requirements for the promotion of the public health, safety, comfort, morals and general welfare as set forth in the provisions hereof. When the provisions of this Ordinance impose greater restrictions than those of any statute, other ordinance or regulation, the provisions of this Ordinance shall be controlling. When the provisions of any statute, other ordinance or regulation impose greater restrictions than this Ordinance, the provisions of such statute, other ordinance or regulation shall be controlling.

d) The provisions of this Ordinance shall be interpreted to be cumulative of, and to impose limitations in addition to, all other codes, laws and ordinances in existence or which may be passed governing any subject matter of this Ordinance. The several provisions of this Ordinance shall also be interpreted to be cumulative of each other. To the greatest extent possible, the provisions of this Ordinance shall be construed to be consistent with, and not in conflict with, the provisions of such other codes, laws and ordinances and each other, to the end that all such provisions may be given their fullest application.

e) Words used or defined in one tense or form shall include other tenses and derivative forms.

f) Words in the singular number shall include the plural number, and words in the plural number shall include the singular number.

g) The masculine gender shall include the feminine and neuter. The feminine gender shall include the masculine and neuter. The neuter gender shall include the masculine and feminine.

h) The word "shall" is mandatory. The word "may" is permissive.

i) The word "person" includes individuals, firms, partnerships, joint ventures, trusts, trustees, estates, corporations, associations and any other similar entities.

j) In case of any difference of meaning or implication between the text of this Ordinance and any caption, illustration or table, the text shall control.

3.6. ***Enforcement.***

a) The applicable Enforcement Officer shall be responsible to alert the owner or developer and the Village Administrator to any violation of this Development Ordinance. Any Enforcement Officer shall have the power to make such decisions, order, requirements, or determinations in conformity with this Ordinance as are necessary to enforce this Ordinance, subject to the approval of the Village Administrator.

b) The Village may take any lawful action it deems necessary to ensure the enforcement of this Development Ordinance. All lawful remedies available to the Village for a violation of this Development Ordinance shall be cumulative and not exclusive to one another.

c) A decision, order, or requirement of the Enforcement Officer may be appealed to the Village Administrator within ten (10) days of the receipt of the decision, order, or requirement of the Enforcement Officer.

3.7. ***Violations and penalties.***

a) Any person, firm, company, or corporation who does not proceed in compliance with the provisions of this Development Ordinance shall be guilty of an offense hereunder, and shall upon conviction be subject to a fine not to exceed $750.00 with each and every day that the violation is allowed to exist constituting a distinct and separate offense under the terms of this Ordinance. In addition, the Village of Wauconda may take whatever action it deems appropriate to enforce the terms of this Ordinance, including an action for injunction. All attorneys' fees and costs incurred by the Village of Wauconda in enforcing this Ordinance shall be paid by the violator.

b) Should any improvement be implemented in violation of this Development Ordinance, the Enforcement Officer, may take appropriate legal steps to remove such improvement, to correct non-complying aspects of such improvement, or to prevent the use of such improvement. The violator shall be responsible for the cost of any such enforcing action of the Village.

c) The Enforcement Officer, his designee, or a sworn peace officer of the Police Department may halt any or all construction activity at a development site if any construction activity is or would lead to a violation under this Development Ordinance. In the absence of formal designation of an Enforcement Officer or officers by the Village Board of Trustees, or in the absence or unavailability of the designated Enforcement Officer, the Village Administrator is hereby authorized to designate such Enforcement Officer for such periods of time as the Village Administrator, in his sound discretion, shall determine to be necessary or expedient.

3.8. ***Building and occupancy permits.***

a) No building permit shall be issued for the construction of any building, structure, or improvement to land or any lot within a subdivision, as defined herein, which has been approved for platting until all requirements of this Development Ordinance have been fully complied with as provided in the applicable Section of the Development Standards and Specifications. This requirement may be waived if specifically addressed in the annexation or development agreement.

b) No structure or building shall be occupied or used unless and until an occupancy permit shall be issued therefore by the Director of Building, Zoning and Economic Development as required by the current codes, as adopted by the Village as the basic building code of Wauconda. No occupancy

permit shall be issued for any structure within a subdivision and/or development approved for platting or replatting until all utility facilities have been installed and made ready to service the structure, until said structure or building shall be in compliance with all applicable laws and ordinances, and until all public improvements intended to serve said structure or building are installed. This requirement may be waived for a model home(s) if specifically addressed in the annexation or development agreement.

c) No certificate of occupancy shall be issued for any structure or building unless an Enforcement Officer certifies that the public and private improvements required by the Development Standards and Specifications for the parcel have been installed in conformity with approved plans and specifications. In the event that weather conditions prevent completion of all improvements a Conditional Certificate of Occupancy may be used as authorized by the Director of Building, and Zoning and Economic Development. The Director may require of the applicant, as a condition to the issuance of a Conditional Certificate of Occupancy, a non-interest bearing completion cash escrow account to be established with the Village by the Developer/Builder/Owner in an amount reasonably determined to be sufficient to complete the uncompleted portions of the improvements. Prior to the release of the Conditional Certificate of Occupancy the developer shall provide a Certificate of Insurance listing the Village as insured in the amount of $1,000,000.00 and an Indemnity Agreement or letter to the Village as follows:

To:

From:

Date:

Subject: Issuance of a Conditional Certificate of Occupancy from the Building & Zoning Officer for Construction of Improvements at [insert address/location of property]

INDEMNITY AGREEMENT

(With/Without Cash Completion Escrow)

The undersigned hereby acknowledges that the real estate which is being built upon is eligible for an occupancy permit as to minimum requirements to safeguard life, health and public welfare, but is subject to remaining work.

We hereby agree on behalf of ourselves, builders, developers for that property, to exculpate, hold harmless and indemnify the Village of Wauconda, its officers, employees, Village Engineer, Inc. and Wauconda Fire District from any and all claimed liability or obligations which might arise as a result of the conditional occupancy permit being issued, although not all requisite Village of Wauconda Codes and Ordinances are in compliance.

This Indemnity for the Village of Wauconda is given whether the claimed liability is contractual, bodily injury, property damage, equitable in nature or otherwise and is intended to be all encompassing because the Village of Wauconda is being induced to issue a Conditional Occupancy permit to accommodate the undersigned.

[IF CASH COMPLETION ESCROW REQUIRED ADD THIS PARAGRAPH]

I/We understand that a Cash Completion Escrow account must be established with the Village in the amount of $_____.00. This amount shall be placed in a non-interest bearing account and stands as security for the completion of the items specified on the Conditional Certificate of Occupancy (CCO). I/We further understand and agree that in the event the items remaining to be completed are not completed by the date called for in the CCO, the Village may, but is not required to, draw upon the escrowed funds in order to complete, or cause to be completed, all or any portion of the specified incomplete work. Upon completion of the items specified on the CCO, and the issuance of the final Certificate

of Occupancy, the funds remaining in the Cash Completion Escrow shall be returned to the person or entity which originally established the escrow.

The scope of work remaining and other stipulations to be eligible for a Certificate of Occupancy is attached hereto, made a part of this agreement and identified as Exhibit A.

Nothing in this agreement binds the Village of Wauconda to issue a final Certificate of Occupancy until all Village Codes and Ordinances are satisfied.

Dated this _____ day of _____, _____

By Print Name: _____

Title: _____

Signature: _____

EXHIBIT "A"

Exhibit A to an Indemnity Agreement addressed to the Village of Wauconda, Dated _____, _____

with respect to property known as _____

The scope of work remaining to be completed is as follows:

_____

_____

Cash Completion Escrow amount to be deposited prior to issuance of Conditional Certificate of Occupancy $_____.00

The above work shall be completed by _____.

Date

Dated this _____ day of _____ ,_____.

By: Print Name: _____

Title: _____

Signature: _____

The Conditional Certificate of Occupancy shall be as follows:

Date of Issue: _____Permit No.: _____

CONDITIONAL CERTIFICATE OF OCCUPANCY

Village of Wauconda

Lake County, Illinois

Name of Owner: _____

Address of Property: _____

This is a Conditional Certificate of Occupancy subject to an Indemnity Agreement addressed to Village of Wauconda dated _____,_____.

Use of Building:_____

Conforming Use: _____ Non-Conforming Use: _____

The scope of work remaining and other stipulations to be eligible for a Certificate of Occupancy has been made as part of the Indemnity Agreement Exhibit A.

By _____

Building Official

4.0. *Development Documentation and Procedures*

4.1. *General.*

It is the intent of this section to provide for the thorough, relatively uniform presentation of pertinent development information by developers or others wishing to alter the present condition of real property. It is further the intent of this section to provide clear documentary evidence of what is, what is proposed, what is constructed, and what all parties agree to. Lastly, it is the intent of this section to provide for the control of physical aspects of documentary material so that such material may be conveniently archived by the Village.

Anything to the contrary in this Ordinance notwithstanding, the Director of Building, and Zoning and Economic Development, or his designee, may reasonably require such further and additional documentation necessary to the proper and efficient administration of the provisions of this Ordinance.

The following requirements shall apply to the documentation for all subdivision and development activities within the jurisdiction of the Village with the exception of architectural drawings having to do specifically with proposed buildings or like structures.

Documents shall conform to the following standards:

a) Documents that are primarily type written, forms, correspondence, etc., shall be 8 ½ x 11 inches except certain legal documents may be 8½ x 14 inches.

b) Plats and plans shall be standard D-size sheets (approximately 24 x 36 inches) unless otherwise approved by the Enforcement Officer.

c) Documents, plats, and plans that consist of more than one sheet shall be bound at the top or left side. Bound sheets shall have a margin of 1½ to 2 inches on the bound side.

d) Certain incidental documentation such as letters of transmittal, receipts, etc., may vary from the above standards and specifications. Some of the sketches or other early drawing items required in the conceptual stage of a project may also vary from the above standards and specifications except that no conceptual stage documentation shall be small-er than 8 ½ x 11 inches.

e) Documents that are 11 x 17 inches shall be folded to 8 ½ x 11 inches.

f) Information conveyed by radio or telephone or otherwise verbally shall not be considered binding unless documentation is also provided. The intent of this provision is to encourage the conveyance of important information by documentation so each transaction is as clear and unambiguous as possible.

g) Documents conveyed through the use of facsimile transceivers, e-mails, and other electronic communication tools are to be considered as less binding than conveyance of original signature documents by mail or by hand delivery. Legal documents involving the Village shall all be original signature documents.

4.2. *Conceptual Planning Stage Documentation*

The purpose of conceptual documentation is to establish where the proposed project is located, whether the applicant owns or is allowed to develop the property in question, the type and scope of the project, and any potential problems with construction in the area of the project. This information will determine whether or not the proposed project is feasible, what level of planning will be necessary, the logistics related to planning and constructing the proposed project, possible problems to be addressed, and the level of Village involvement that will be required.

a) ***Required documents.*** Three (3) copies of the following shall be submitted.

1. ***Ownership***

   The applicant shall provide evidence of ownership or evidence of approval of the owner to develop the proposed project site. If the ownership is in a trust, the applicant shall provide the name of the trustee(s), the name of the trust beneficiary(ies), and the trust number.

2. ***Location***

   The applicant shall provide a map showing the loca-tion of the proposed project site as well as nearby transportation routes and other significant features. The location map shall include a north arrow, title, scale, and date.

3. ***Topographical Plat***

   The applicant shall provide a topographical plat of the proposed project site showing all existing zoning, land use, land characteristics, woods, wetlands, floodplains, pertinent nearby municipal improvements, public utilities, easements, buildings, etc., in and within two hundred feet (250') of the site. The topographical plat shall include a north arrow, title, scale and date. The scale (1 inch = 20 feet, 1 inch = 40 feet, 1 inch = 50 feet, 1 inch = 100 feet, or 1 inch = 200 feet) of the plat shall be appropriate to the size of the site. Contours shall be at no more than one-foot inter-vals and shall be based on benchmark elevations using the USGS datum. Portions of this provision may be waived at the option of the Enforcement Officer based on the scope of the proposed project.

   The Village may require additional topographical data, particularly if there appear to be problems with drainage.

4. ***Site Plan***

The applicant shall provide a series of drawings or sketches made on copies of the topographical plat showing the proposed layout of streets, lots, and site improvements in relation to the existing features.

The following shall be shown:

a. Boundary lines of the site with dimensions.

b. Proposed lots, building setback lines, building locations and separations, and pedestrian considerations, with the approximate size of each lot shown in square feet and in acres.

c. Proposed street layout, off-street parking, loading spaces, fire lanes, and exterior street improvements such as turning lanes.

d. Proposed open spaces, monument depicting proposed name of development to include "of Wauconda", school sites, park sites, and private recreation facilities.

e. Proposed drainage and storm water detention/retention locations.

f. Alternate designs or layouts with only enough detail to make the alternatives understandable.

5. ***Land Use Schedule***

The following information shall be required:

a. Total acreage of site.

b. Proposed land use by acreage and percent of total.

c. Proposed gross, net residential density for residential portions of the proposed project.

d. Proposed floor area ratio and land coverage in percent for nonresidential portions of the proposed project

6. ***Architectural renderings of anticipated structures***

4.3. ***Conceptual Planning Stage Procedures.***

a) The developer shall apply to the Director of Building, Zoning and Economic Development for Village conceptual review.

b) The Director of Building, Zoning and Economic Development shall consider the nature of the project and shall decide the magnitude of Village review required and who should be involved at this stage.

c) The Director of Building, Zoning and Economic Development shall schedule a meeting to include the developer, the Director of Building, Zoning and Economic Development, and the Village Administrator. The purpose of the meeting is to inform the developer of the requirements of the development ordinances and the Comprehensive Plan and to identify where the project may not comply with the ordinances or the Plan.

d) If requested by the Petitioner, the Director of Building, Zoning and Economic Development shall arrange through the Village Administrator to place the project on the Committee of the Whole agenda for conceptual review. The Director of Building, Zoning and Economic Development shall notify the developer of the concept review date. Seven (7) working days before the conceptual review, the developer shall deliver to the Village Administrator fifteen (15) copies of the required documents. The petitioner should address the following items for Village Board consideration:

1. General description of the proposal with respect to proposed land use(s). (i.e., single family residential; multiple family residential; commercial; office; business park; mixed use development; etc.)
2. Relationship of the proposal to the Comprehensive Plan.
3. Existing zoning of property and surrounding districts and zoning district(s) which are being requested.
4. Type of structures proposed. (i.e., detached single family, attached single family; townhomes; condominiums; shopping center with multiple outlots; four story office building; etc.)
5. Description of any natural features on property. (i.e., wetlands; woodlands; slopes; ponds; etc.)
6. Anticipated access points to the property.
7. Site Plan as specified in Section 4.2, a), 4.
8. Architectural renderings of anticipated structures.

   The fact that the Village Board approves a conceptual plan is no guarantee that the Village Board will approve a subsequent preliminary or final plan.

e) After conceptual review, the developer may proceed to item "a)" of the **Preliminary Planning Stage Procedures** (Section 4.5.) if required by the magnitude of the project. If the project is of a minor nature as determined in the conceptual review and if the documentation is adequate, the developer may proceed to item "f)" of the **Preliminary Planning Stage Procedures** (Section 4.5., f)).

4.4. *Preliminary Planning Stage Documentation.*

The purpose of preliminary planning stage documentation is to establish particular planning and design solutions to the problems posed by the project as conceived, including variations. In this stage, other agencies have the opportunity to comment on the project from their own perspective. The Village will finalize its requirements related to the project and will review the proposed planning and design solutions, including variations. The applicant shall be required to pay for information consultation with Village consultants taking place prior to the formal plat/plan review.

a) **Required documents.**

The applicant shall deliver to the Director of Building, Zoning and Economic Development 20 copies of each of the following documents as judged applicable by the Director.

1. ***Plat of Survey***

   The plat of survey shall be prepared and certified by a surveyor licensed to practice in the State of Illinois. The plat of survey shall include the entire area to be subdivided or resubdivided. The plat of survey shall include or shall be accompanied by a precise legal description of the property in its entirety.

2. ***Traffic Study***

   The Village Engineer may require a traffic study prepared in conjunction with the proposed improvements if there is reason to believe the flow of traffic will be impacted due to the proposed project. The need, scope and recommendations shall be defined by the Village Engineer at the conceptual plan stage. The traffic study shall be prepared by a qualified independent professional or professional traffic engineering firm.

3. ***Preliminary Plat***

   The preliminary plat of subdivision shall conform to the following requirements. Minor variations in layout of the drawings may be allowed based on the nature of the drafting involved.

a. The preliminary plat shall be a minimum of 24 by 36 inches or as otherwise approved by the Director of Building, Zoning and Economic Development based on the requirements of the County Recorder.

b. The margin on the side of the sheet to be bound, if any, shall be 1½ to 2 inches. The margins on the other sides shall be at least one-half inch.

c. If more than one sheet is required, each sheet shall show the sheet number relative to the total number of sheets (SHEET 1 OF 3, SHEET 2 OF 3, etc.).

d. The current revision date shall be shown on each sheet near the sheet number.

e. If more than one sheet is required, the sheets shall be firmly fastened together.

f. Each sheet shall have the title of the plat, boldly lettered.

g. The lot, site, or phase number shall be placed below the title on each sheet. If the project has a secondary name, it shall be placed parentheti-cally after the lot, site, or phase number. No more than one such title modifier is permitted per plat.

h. The location of the project shall be described by government lot (if appropriate), quarter-quarter section, township, range, municipality, county, and state. Only the section(s) actually shown on the plat shall be cited.

i. The word "PRELIMINARY" shall be boldly lettered on each sheet. The word "FINAL" shall appear nowhere on the plat relative to the title of the plat.

j. A location map showing the view depicted on the sheet in relation to adjacent sites and showing roads, streets, railroads, drainage ditches, watercourses, etc., within 250 feet of the view depicted on the sheet shall be placed near the word description of the location. The location map shall be oriented to match the main drawing.

k. A properly oriented north arrow to serve the entire sheet shall be placed near the above maps.

l. The scale of the main drawing shall be placed near the north arrow. The scale shall be selected from the following: 1:100, 1:50, 1:40, 1:30, 1:20, or 1:10 (inches:feet). The scale shall also be shown graphically.

m. The full name, address, and telephone number of the owner and the person or firm preparing the plat shall appear on the plat.

n. Certificates shall be provided as applicable for state and county highway departments where roadway access is required.

o. If a section line crosses the area shown on a particular sheet, it shall be properly shown on that particular sheet.

p. Easements shall be shown on the main drawing as dashed lines. Each easement shall be clearly dimens-ioned and labeled as to purpose.

q. Parcels that are not formal lots shall be clearly labeled as to their intended use.

r. The names of public or private streets shall be shown wherever the streets appear on the plat.

s. The names and document numbers of adjacent subdivisions shall be shown on the main drawing.

t. The exterior boundaries of the subdivision shall be shown as the heaviest lines on the main draw-ing. At least two widely separated exterior boundary corners shall be tied to government subdivision lines and/or corners.

u. Street centerlines shall be shown.

v. Street right-of-way limits shall be shown as relatively heavy lines.

w. The exact length and bearing of each straight line shall be shown near each straight line. The exact length and radius of each curved line shall be shown near each curved line.

x. Blocks shall be consecutively numbered or lettered in alphabetical order. Blocks that are additions to those in an existing subdivision shall be so labeled beginning after the last block in the existing subdivision.

y. All lots in each block shall be consecutively numbered.

z. All surveyed meander lines shall be shown and fully described by length and bearing. The points where meander lines intersect other surveyed lines shall be shown and described with appropriate dimensions.

aa. Curve tables shall be provided to show for each curve: number, radius, central angle, tangent length, main chord length, and main chord bearing.

bb. Floodplain limits and wetland areas shall be shown on the preliminary plat.

cc. Ties between boundary corners and significant existing topographical features such as pavements, ditch centerlines, etc., shall be shown.

dd. If a boundary street or a boundary line appears on a sheet, details such as intersecting streets, lot corners, blocks, etc., of the property on the other side of the street or line shall be shown.

4. ***Preliminary Plans***

At the time of submission of a preliminary plat, plans of public improvements shall also be submitted. These preliminary plans shall include at least the following items:

a. Preliminary layout of grading and drainage showing the approximate method of lot drainage and street drainage throughout the subdivision. Preliminary detention and drainage calculations, including inverts, must be included.

b. Preliminary layout of sanitary sewerage facilities showing approximate sizes and lengths of sanitary sewers, location of treatment facilities, depths and gradients of sewers, and other pertinent information concerning the sanitary sewer system.

c. Preliminary layout of water mains, showing sizes and locations of mains, valves, fire hydrants and other appurtances.

d. Preliminary layout of storm sewers, showing locations, sizes, gradients, and depths of all storm sewers.

e. Preliminary layout of streets, showing cross section and grades and gradients of all streets proposed within the subdivision.

f. A statement concerning the materials to be used in the construction of the above.

g. Preferably, all preliminary plans shall be sub-mitted on twenty four inch by thirty six inch (24" x 36") size drawings and shall bear the name and address of the Illinois registered professional engineer under whose direction they were prepared.

5. Preliminary Landscaping Plans

The preliminary landscaping plans shall include:

a. Location, size, type, common and botanical names of all existing trees that are to remain.

b. All berming, screening, and fencing.

c. Entrance treatment.

6. Reports

The applicant shall provide the following documents as determined to be applicable by the Director of Building, Zoning and Economic Development:

a. Lake County Soil and Water Conservation District natural resource opinion.

b. Lake County DOT report concerning permits for access to county roads.

c. Illinois Department of Transportation report concerning permits for proposed work in federal or state rights-of-way.

d. School district reports/agreements concerning donation of land or cash contribution for increased load on the school system.

e. Wauconda Park District report concerning donation of land or cash contribution for increased load on the park system facilities.

f. Soil boring report and interpretation including location map by professional soil testing firm.

g. Fire District report concerning fire protection for the proposed development.

h. Wildlife and Endangered Species Consultation Report by Illinois Department of Conservation.

i. Report concerning presence and status of wetlands on site prepared by wetlands specialist or U.S. Army Corps of Engineers.

j. Archaeology report by suitable professional or professional firm.

k. Any other report requested by board, commission, or staff.

7. ***Other Documents***

a. Detailed fact sheet showing breakdown of land use type by acres, type and number of dwelling units with bedroom mix breakdown, number of buildings, gross and net residential density, building coverage (nonresidential), floor area ratio (nonresidential), percent of green area, percent of paved area, and estimated total population (residential) or estimated number of employees (nonresidential).

b. Schedule showing number of required parking spaces, including guest parking, actual number of parking spaces provided for, and parking space ratios compared to zoning ordinance requirements.

c. Breakdown of open space by acreage including environmentally sensitive areas and including a list of recreational facilities and who will own and/or be responsible for their maintenance.

d. Preliminary environmental management plan for the preservation of onsite wetlands, conservation areas, wildlife habitats, etc.

e. With submission of Public Works Utility Permit, a Plat of Survey denoting water and sewer services and storm sewer service lines must be included.

f. All documents referred to in the Watershed Ordinance.

4.5. ***Preliminary Planning Stage Procedures.***

a) The developer shall prepare preliminary plats, plans, specifications, and draft development or annexation agreements as determined during the conceptual review.

b) The developer shall submit eight (8) copies of the documents indicated in the previous step "a)" to the Director of Planning and Zoning and shall pay a technical review fee of $500.00 and establish an escrow account for the payment of senior planning staff, legal and other consulting costs and fees related to the review of the development in an amount determined by the Director of Planning and Zoning. The developer and/or the owner, as the case may be, shall enter into a written "Development Escrow Agreement" with the Village prior to the Village proceeding with any stage of the development process. The Development Escrow Agreement shall be in substantially the following form:

VILLAGE OF WAUCONDADEVELOPMENT ESCROW AGREEMENT

Escrow Number:_____ **Initial Escrow: $_____**

Developer/Owner Name and Information:

Name: _____

Address_____

Phone: _____ E-mail _____

Project Name: _____ Project Location: _____

For and in consideration of the Village processing my development inquiry and/or application, the undersigned makes this escrow deposit with the Village of Wauconda. I understand and agree that this escrow account shall be a non-interest bearing account.

The undersigned understands and agrees that the Village shall, from time to time, draw from this escrow account in order to pay any reasonable fees and costs of consulting professionals the Village deems necessary to consult with pertaining to the subject project such as engineers, plan review services, planners and attorneys. The undersigned also agrees to reimburse the Village for the Village's actual cost of senior Village Planning Staff for time spent on plan review, consultations, and planning and zoning issues uniquely and specifically attributable to the subject development or project. The Village shall keep complete and accurate records of the senior planning staff time attributable to the subject development or project and the undersigned shall be entitled to request a copy of such time records upon reasonable notice. The term "actual cost" as used in this paragraph shall mean the direct salary and benefits costs paid to the senior planning staff members from time to time and expressed and billed against escrow at an hourly rate.

I also understand that I may request to review any and all bills and statements for services rendered and costs incurred which have been paid or reimbursed to the Village from this escrow account.

The undersigned further understands and agrees that when the escrow account balance is reduced to 20% or less of its original amount (or any subsequent reduction(s) to 20% or less of the total amount if and when replenished) that the Village may require additional deposits into the escrow account from time to time in such amount or amounts as the Village reasonably estimates will cover remaining consultants' fees and costs.

The undersigned understands and agrees that if the escrow account is not replenished when requested by the Village that the Village may, in its sole and exclusive discretion, cease any further plan reviews, cease the further processing of any pending applications, cease any further inspections and refuse to issue any permits pending until such time as the escrow is replenished by a further deposit in the amount requested.

When the project is complete and no further consultant and/or staff expenses are reasonably anticipated by

the Village, the Village shall refund the remaining balance of the escrow account to the person or entity making the most recent deposit.

Approved at Wauconda, Illinois this ____ day of _____, 20___.

Developer/Owner

_____ By: _____

Title (if Applicable)_____

APPROVED:

Date: _____

By: _____ Village Title or Office _____

c) The Director of Planning and Zoning shall forward the documents of the previous step "b)" to appropriate members of the Technical Review Committee which consists of:

Village Administrator

Police Chief

Fire Chief

Village Engineer

Director of Public Works

If the developer submits revised documents directly to any of the Technical Review Committee, the developer shall also provide identical copies to the Director of Building, Zoning and Economic Development. If the Director of Building, Zoning and Economic Development determines that the revisions should also be seen by other members of the Technical Review Committee, the Director of Building, Zoning and Economic Development shall require that additional revised copies be provided.

d) The Technical Review Committee shall meet to discuss the project and the documents submitted. Director of Building, Zoning and Economic Development shall chair the Technical Review Committee. Detailed minutes shall be taken during all meetings and forwarded to all members of the Committee.

e) The Director of Building, Zoning and Economic Development shall forward a copy of all minutes to the developer and explain the findings of the Technical Review Committee. The developer shall amend the plans accordingly and submit twenty-five (25) sets to the Enforcement Officer.

f) The Director of Building, Zoning and Economic Development shall arrange for the developer to meet with the Zoning Board of Appeals/Plan Commission which shall conduct a Public Hearing to review the preliminary planning documents. The Director of Building, Zoning and Economic Development shall inform the developer of meeting requirements.

g) The Director of Building, Zoning and Economic Development shall forward the minutes of the meeting of the previous step "f)" to all members of the Technical Review Committee.

h) The Director of Building, Zoning and Economic Development shall forward to the Village Administrator twelve (12) copies of the plans from the previous step "d)" and the minutes from the Zoning Board of Appeals/Plan Commission meeting in order to schedule an appearance of the developer before the Committee of the Whole. The Committee of the Whole shall review the Zoning Board

of Appeals/Plan Commission's recommendation, the preliminary planning documents (and development or annexation agreement if applicable) and shall forward its recommendations to the Village Board.

i) If the Committee of the Whole recommendations are sufficiently negative, the developer may, within sixty (60) days:

1. Make appropriate revisions to the preliminary planning documents and resubmit them to the Committee of the Whole.

2. Abandon the project.

In the event the developer fails to make the appro-priate revisions or abandons the project, a recommendation shall be forwarded to the Village Board for no further actions.

If the Committee of the Whole recommendations are positive and illustrative of the required Village Board action, the developer shall proceed to the Final Planning Stage.

4.6. ***Final Planning Stage Documentation.***

The purpose of final planning stage documentation is to fix agreed-upon planning and design solutions, to record the necessary documents, and to ensure that the Village, its employees, staff, and consultants are protected in the event the applicant fails to perform the work of the project properly.

a) ***Required documents.***

The applicant shall deliver copies of the following documents to the Director of Building, Zoning and Economic Development. The applicants shall provide the original copies of all documents to be recorded.

1. ***Final Plat of Subdivision (15 copies plus originals)***

a. The final plat of subdivision is the legal document for the subdivision, to be recorded by the Village in the Office of the Lake County Recorder of Deeds of the County.

b. The final plat of subdivision shall be signed and sealed by a surveyor or a surveying firm licensed to practice in the State of Illinois.

c. The word "FINAL" shall be boldly lettered on each sheet.

d. All certificates except those for Village personnel shall be fully executed.

e. Certificates shall be provided for the Village Engineer, the Planning Commission, the Village Board of Trustees, the Village Collector, and the County Collector - in that order. These latter certificates shall be placed together.

f. Certificates shall be provided as applicable for state and county agencies including state and county departments.

In addition to all information contained on the prelim-inary plat, the following items shall be included:

2. ***Surveyor's Certificate***

A properly worded surveyor's certificate shall be placed either to the side of the main drawing or above the owner's certificate. The surveyor shall certify the relationship of the property to any floodplain and that the surveyor has set and described all subdivision monuments as required by the Plat Act. The surveyor shall also add his statement authorizing the Village of Wauconda to record the final plat with the Office of the Recorder of Deeds.

3. ***Certificate of Ownership***

The owner's certificate shall include a notary public's certificate if the owner is a corpora-tion. The owner's certificate shall include an attestation if the owner is not a corporation.

4. ***Utility Certificates***

   Certificates shall be provided for electrical, telephone, and gas company provisions. Each of these shall require a signature line.

5. ***Boundary Monuments***

   Boundary monuments and other important monumented points shall be labeled as to material. In subdivisions of more than ten lots, the lot corner monuments do not have to be shown but their material shall be noted elsewhere on the plat.

6. ***Protective Covenants***

   Six (6) copies of the proposed protective covenants shall be submitted for approval. The document shall be clearly marked at the top of the first page with the draft number and the date generated. One copy shall be electronically transmitted to the Village in Microsoft-Word format. There shall be a statement placed on the final plat that the platted property is subject to Covenants, Conditions and Restrictions of Record (CCRs) and the recorded document number of the CCRs shall be included with the statement.

7. ***Roadway Dedication Notation***

   Roadway right-of-way dedications to the Village shall be clearly marked on the Plat and shall contain a statement to the effect: "Hereby dedicated to the Village of Wauconda for roadway, right-of-way and municipal utility purposes and for all other municipal uses consistent with the provisions of the Illinois Plat Act"

8. ***Easements Granted to the Village***

   All easements granted to the Village shall be clearly marked and defined and shall contain a statement that such easements are permanent, exclusive and non-restorative. No plan of condominium or town-home development shall provide for Village sewer and/or water facilities easements to underlie any proposed or possible private improvements.

9. ***Final Plans (15 copies)***

   The final plans shall be well-detailed based on careful fieldwork and detailed surveys.

   a. After the approval of the preliminary plat by the Village Board, and prior to the filing of an application for the approval of the final plat, the subdivider shall submit to the Director of Building, Zoning and Economic Development, engineering plans prepared by and bearing the seal of a Professional Engineer licensed in Illinois, for the construction of the subdivision and the construction of the following and all other subdivision improvements:

      - Streets
      - Curb and gutter
      - Sanitary sewerage system
      - Storm drainage, including sewers, detention, etc.
      - Water supply and distribution system
      - Street lights
      - Sidewalks

- Street signs, guard rails, landscaping, etc.
- Public utility locations
- Such other improvements that may be required by this ordinance, annexation agreements or by the Village Board as a condition of the tentative approval of the preliminary plat.

10. ***Specifications and Special Provisions (15 copies)***

    a. The specifications and special provisions shall address every improvement planned in the development in a manner satisfactory to the Village Engineer.

    b. The specifications and special provisions shall include an engineer's detailed estimate of construction costs.

11. ***Other Documents (6 copies each*)**

    The applicant shall provide the following additional documents, if applicable, at this time.

    a. Lake County Highway DOT permit(s).

    b. IDOT permit(s) and bond(s). (Division of High-ways)

    c. IDOT permit(s). IDNR.-OWR.

    d. IEPA permit(s).

    e. Other permits as required by other agencies.

    f. A properly executed sworn statement and agreement listing the improvements the applicant intends to construct at his own cost, the time of com-pletion of the project, and the method of payment for the improvements, to include:

        1) A signature and attest line for the Village Board approval of this document.

        2) A provision guaranteeing that the improvements will be constructed according to the Village-approved plans and specifications and to the Village ordinances.

        3) A provision affirming that all bonds, guarantees, deposits, etc., required under this development ordinance have been furnished to the Village.

        4) A provision to the effect that the applicant shall be responsible to pay all costs, in-cluding but not limited to, attorney's fees and engineer's fees incurred in the event the Village must enforce the provisions of this development ordinance during the life of the project.

        5) Evidence of insurance covering their employees, the Village of Wauconda, and the Village Engineer, and including their respective officers, directors, employees, agents and other consultants, with rated companies, in amounts as noted below. Insurance covering the Village and the Village Engineer, as "additionally insured" parties shall not be modified by riders that reduce the protection provided the Village and the Village Engineers to less than that afforded the applicant and his employees.

            a) A clause relieving the Village, its officers, employees, and consultants of any liability arising from the design of construction of the project the Village Attorney must fully approve the wording of this clause.

    g. A fully executed performance guarantee in the amount of 115 percent of the total estimated construction costs as determined by the Village Engineer for all work to be done. Such guarantee will be subject to the condition that the im-provements will be completed within two (2) years after approval of the final plat and is subject to the approval of the Village Attorney a-nd shall be in one of the following forms:

1) Irrevocable, unconditional standby letter of credit for the benefit of the Village issued by a state or federally chartered financial institution with offices in Lake County Illinois which service draws upon such letters of credit; or a performance guarantee in an acceptable form of a bond issued by an insurance company, bonding company or other institution in the business of issuing such instruments and authorized to do business in the State of Illinois. The issuing entity shall have a quality rating of "A" or better and a financial strength rating of 10 or better according to the A.M. Bests guide or equivalent rating agency.

2) Cash with escrow agreement satisfactory to the Village Attorney and to the Village Board of Trustees.

Note: The Village Engineer shall review the detailed engineer's estimate of the cost of construction to verify that it is a reasonable estimate. When lawfully authorized to do so, the Village shall select the nature of the performance guarantee (letter of credit or bond).

h. Insurance documents

1) "The subdivider/developer shall provide and maintain Comprehensive General Liability Insurance which will protect the Village of Wauconda, the Village Engineer and each of their officers, employees, agents and consultants from claims which may arise out of or result from the performance of work by anyone directly or indirectly employed by the contractor or subcontractor, or by anyone for whose acts the contractor may be liable. Comprehensive General Liability Insurance shall provide coverage in the amount of $1,000,000.00 per accident for property damage and $1,000,000.00 per person and $3,000,000.00 aggregate per accident for bodily injury, sickness of disease, or death of any person.

2) The subdivider/developer shall not commence work until certificates of insurance showing coverage of all insurance required, signed by the insurance companies or their authorized agents has been filed with both the Village and the Village Engineer. Each certificate shall provide that coverage shall not be terminated or reduced without thirty (30) days advance written notice to the Village and the Village Engineer.

3) The policies of insurance so required by this paragraph to be purchased and maintained shall:

a) Be furnished by insurers with A.M. Best Company rating of at least A (Excellent), and a financial category of 10 or greater.

b) With respect to comprehensive general lia-bility insurance, include as an additional insured the Village and the Village Engineer and all of whom shall be listed by name as additional insured's, and include coverage for the respective officers, directors, employees, agents and other consultants of all such additional insured's;

c) Remain in effect at least until final pay-ment and at all times thereafter when the developer may be correcting, removing or replacing defective work in accordance with this Ordinance, and

d) With respect to completed operations, insurance remains in effect for at least two years after final payment. The developer shall furnish the Village, Village E-ngineer and any other additional insured an insurance policy as furnished evidence satisfactory to the Village and any such additional insured's of continuation of such insurance at final payment and two years thereafter.

4.7. *Final Planning Stage Procedures.*

a) The Village Administrator shall schedule an appearance of the developer before the Village Board at a regular meeting. Any Public Hearing required shall be held at this time. The Village Board shall review the documents and approve the project by the passage of the appropriate ordinances.

b) If the project is approved, the developer shall prepare the planning documents in final form if not already done. The Village Board shall not grant final approval until all required fees are paid. No building permit shall be issued until all final approvals and fees have been received. The Village Board shall sign and seal the appropriate final planning stage documents.

c) Prior to final plat approval, the applicant may request a permit to commence earth moving and grading operations in accordance with the provisions of the Watershed Development Ordinance. The Village Engineer may consider granting the applicant's request if, as a minimum requirement, the provisions for Earth Change Approval are met as found in the Watershed Development Ordinance.

4.8. ***Construction Stage Documentation.***

The purpose of construction stage documentation is to monitor and record construction progress and to address problems that arise during the course of construction.

a) **Required Documents**

1. ***Revised Plans***

Revised plans reflect changes to the final plans that arise because of difficulties encountered during construction or because errors are discovered.

a. The revision date shall be clearly shown near the date of the final plans.

b. The revised plans shall be accompanied by support documentation consisting of the applicant's request for a change in the final plans, the reasons for the requested change, the change in estimated cost of construction, and the written comments of the Village Engineer or other Village personnel or officials who may have become in-volved.

2. ***Contract Documents***

a. A certified copy of the signed contract documents including itemized contract amounts shall be furnished to the Village Administrator and to the Village Engineer. Likewise, if bids are taken to choose a contractor, an itemized bid tabulation sheet shall be furnished.

3. ***Contractor's Insurance***

The general contractor shall furnish evidence of insurance.

4. ***Performance Guarantee Reduction***

All requests for reduction in amounts of performance guarantees shall be in writing and shall be filed with the Village Clerk with a copy to the Village Administrator. Such requests shall include an itemized list of the work fully completed to date and an itemized list of the work yet to be completed.

5. ***Maintenance Warranty***

The developer shall maintain the performance guarantee for a three (3) year warranty period. The warranty period for public improvements shall begin on the day the public improvement is accepted by the Village as evidenced by the Village release of a portion of the performance guarantee equal to one hundred percent (100%) of the final construction cost of the ap-proved improvement. Note that fifteen percent (15%) of the original amount of performance guarantee shall be retained, or a separate maintenance bond in such amount shall be provided to the benefit of the Village, until the end of the warranty period. The performance guarantee shall be in an acceptable form of a bond

issued by an insurance company, bonding company or other institution in the business of issuing such instruments and authorized to do business in the State of Illinois. The issuing entity shall have a quality rating of "A" or better and a financial strength rating of 10 or better according to the A.M. Best guide or equivalent rating agency.

The Village may require an extended warranty be provided because of factors arising during construction or because of ordinance exceptions granted.

6. ***As-Built Plans***

The developer shall provide a reproducible set of revised plans that accurately show the planned improvements as they were actually constructed, to include overflow storm runoff routes and elevations, including contours, as remeasured.

a. Electronic Autocad format – Village to provide layers and CADD symbols to be used.

4.9. ***Construction Stage Procedures.***

a) The developer shall submit the appropriate application and documents to the Director of Building, Zoning and Economic Development. No construction shall be allowed if the proper documentation is not furnished to the Village.

b) After a general contractor has been engaged but before construction shall begin, the Director of Building, Zoning and Economic Development shall convene a preconstruction meeting. Representatives of the developer, the contractor, the Village Public Works Department, Village Building Department, and the Village Engineer may attend. Representatives of other public or quasi-public agencies shall be invited and may attend at their option.

c) The developer shall, prior to commencing construction work, file with both the Village and the Village Engineer, certificates of insurance showing coverage of all insurance required, signed by the insurance companies or their authorized agents.

d) The developer or the contractor shall notify the Director of Building, Zoning and Economic Development and the Village Engineer at least 48 hours before construction is to begin or end. This provision shall apply also to the resumption of construction after a break of three days or more and to the temporary halting of construction as for holidays or vacations. Significant changes in the construction schedule shall be reported to the Village Engineer.

e) Additional meetings may be scheduled by the Village staff or consultants as they deem necessary.

f) All subdivision improvements shall be completed within two (2) years of final plat/plan approval by the Village Board or within a timetable approved by the Village Board.

g) As-built plans and waivers of lien satisfactory to the Village Attorney and the Village Engineer shall be furnished to the Village before a final inspection will be made of the improvement. As-builts will be paper and Autocad format.

1. Village Water System, Sanitary Sewer System and Stormwater Collection System will be numbered per Village specifications.

h) The Village Engineer shall make a final inspection of the improvements and shall compile a final "punch list" letter to the developer of all items requiring attention and/or correction.

i) Once all items of the final punch list letter have been attended to or corrected to the satisfaction of the Village Engineer and other Village officials, the Village Engineer shall submit an approval letter to the Village Board which may then accept the project improvements.

j) Developer must include a Bill of Sale that denotes all improvements per Village specifications.

k) The Village will not take ownership of any improvements until all improvements in the phase are complete as defined by the plans and specifications. The Village requires establishment of Maintenance Bond at the time the applicable Letter of Credit, or Bond is released.

l) The warranty period shall begin the next calendar day after Village Board acceptance of the project improvements.

5.0. ***Development Standards and Specifications.***

5.1. *General Provisions.*

a) ***Effect of Existing Building Permits and Zoning Certificates***

Nothing in these Development Standards and Specifications shall be deemed to require any change in the plans, construction or designated use of any land or structure in the event that:

1. Final plat or plan approval for such subdivision or development was lawfully issued prior to the effec-tive date of the Development Standards, or the effective date of any amendment thereof; and
2. Such approval has not by its own terms expired prior to such effective date; and
3. Such approval was issued on the basis of an application showing complete plans for proposed construc-tion; and
4. There has been a substantial expenditure or incurrence of substantial obligations by the applicant in reliance on such approval; and
5. Such expenditure or incurrence of substantial obli-gations were made prior to published or actual notice of the Development Standards; and
6. Construction pursuant to such approval is complete prior to the expiration of such approval.

b) ***Scope of Development Regulations***

All developments, redevelopments and improvements shall be constructed in accordance with the standards and specifications set forth herein. No person shall commence or cause to be commenced any development within the corporate limits of the Village unless a development plan which is in compliance with these standards and specifications has been approved by the Village Board.

c) ***Permits***

1. No building permit shall be issued for the construction of any building, structure or improvement on any parcel if the parcel is not a properly created lot of record, nor until a final subdivision plan and/or development plan, made necessary by the Development Standards of the Ordinance, shall have been approved and recorded in the office of the Recorder of Deeds of the County.
2. No construction above foundation can occur until a suitable access road is in place able to carry Fire District vehicles and emergency vehicles. Also, fire hydrants shall be installed and live; i.e., the water mains shall be in and tested.

d) ***Certificates of Occupancy***

1. No final certificate of occupancy shall be granted for the use of any building or structure on a lot subject to the Development Standards until:

a. Required sanitary sewer and water service has been installed and made ready for servicing the parcel; and

b. Sidewalks, parkway trees, and sod or seeding are completed for the parcel by the developer; and, if a subdivision:

- Lots in a subdivision rough graded;
- Stormwater runoff provided for; and
- Roadways and/or fire lanes providing access to the lot and subdivision have been paved with the binder course of asphalt, as set out herein.
- All street signage must be in place.
- All offsite infrastructure including water, sewer, storm sewer must be installed.

e) ***Modifications***

Upon finding that severe hardship, caused by conditions uniquely attributable to the land under consideration, would be imposed upon an applicant by compliance with these regulations and upon a finding that there are alternate feasible means of fulfilling the purpose and spirit of the regulations to protect the public health, safety and welfare, the Plan Commission may recommend that the Village Board may grant modifications from the regulations of the Development Standards and Specifications.

5.1.1. ***Public Improvements.***

a) ***Public Improvement Requirements***

The public improvement requirements, development standards and specifications contained herein are adopted as the minimum required standards and specifications for public improvements of the Village. When public improvements are required by application for subdivision, no such improvements may be made until the plats for the subdivision and also the plans for improvements thereto have been approved by the Village Board. The Enforcement Officer is designated as the enforcing officer of the public improvements requirements, standards and specifications contained herein. When public improvements are made other than as part of a subdivision, no such improvements may be made until the plans are approved by the Village Engineer. If any improve-ments are being constructed in violation of regulations contained herein, it shall be the responsibility of the Enforcement Officer or his designee, to stop such construction until there is full compliance with said regulations.

b) ***Public Improvements Timeframe***

All public improvements within a subdivision shall be completed within two (2) years of the start of construction or when seventy-five percent (75%) of the lots in the subdivision are completed, or whichever occurs first unless otherwise provided for in an annexation or development agreement.

5.1.2. ***Private Improvements.***

All construction on private property in a subdivision or development shall conform to the requirements stated herein. No private improvements may be considered for future acceptance by the Village unless constructed in accordance with Public Right-of-Way standards (5.3.2.a)).

a) ***Parking Lots***

1. All parking lots shall be designed in conformance with:

a) Transportation and Traffic Engineering Handbook - Institute of Transportation Engineers, latest edition.

b) The Zoning Ordinance.

c) These Development Standards.

2. Parking areas shall be designed and constructed in accordance with these Development Standards except as follows:

   a) Minimum structural number shall be 2.5 for parking stall areas and a minimum structural number of 3.0 for aisles and fire lanes, but in no case less than the minimum thickness as provided in Section 5.3.2.

3. Combination concrete curb and gutter type B 6:12 or concrete barrier curb Type B shall be constructed around the perimeter of all parking lots and around all islands within parking lots.

4. Striping of the pavement surface to define each parking stall is required except for single family dwellings and such striping shall be a minimum of four inches (4”) wide for the length of the stall. All areas designed as fire lanes and/or "No Parking" shall be painted with yellow stripes.

5. Any location within parking lots intended for storage of trash containers exceeding 2.0 cubic yards capacity shall be constructed of concrete rather than bituminous surface as provided in Section 5.3.2., and shall be enclosed with an approved screen or enclo-sure.

b) ***Driveways***

1. ***Design***

All private driveway designs shall be consistent with the projected traffic volume and type of roadway, and shall be subject to the review and approval of the Village. All driveways shall meet the minimum standards of the Zoning Ordinance and these Development Standards. Driveway design shall be based upon a maximum of twelve feet (12’) per lane. Any private driveway designed for three (3) or more lanes shall be striped or divided; as approved by the Director of Building and Zoning or Village Engineer.

2. ***Distance and Number***

Driveway access to arterials shall be kept to a minimum. Whenever possible adjacent uses shall share common driveway access to arterials. The minimum distance between driveways on arterials shall be three hundred feet (300’), unless otherwise permitted upon review by the Director of Building and Zoning and/or Village Engineer and other units of government when applicable.

3. ***Construction***

Driveways within a site shall be constructed to the minimum specifications as provided in Section 5.3.2. Driveways with high volumes of truck traffic or other heavy loads shall be increased appropriately.

c) ***Private Streets***

All streets which serve as access or frontage to subdivided lots shall be dedicated to the public unless specific approval is granted by the Village Board. When any private streets are approved by the Village Board and are constructed, the following construction specifications shall apply:

1. ***Design***

Private streets shall conform to the requirements for public streets as stated in Section 5.3.2., regarding general layout, design, intersections and offsets.

2. ***Construction***

Private streets shall conform to the requirements for public streets as provided in Section 5.3.2., regarding general pavement design and specifications.

d) ***Sidewalks***

Sidewalks shall be constructed where pedestrian and vehicular traffic may conflict on private streets and where necessary to provide access from parking areas to buildings. Sidewalks shall have a minimum clear width of five (5) feet and shall conform to the requirements for public sidewalks as provided in Section 5.3.2.j.

e) ***Bike Paths***

Whenever constructed, bike paths shall comply with the requirements provided in Section 5.3.2.k. Bike Paths for Public Right-of-Way.

f) ***Easements***

Easements shall be required for any development in order to provide for placement of public utilities, protection of residential uses, continuity of waterways, flow and storage of stormwater runoff, and pedestrian access. Easements shall be located whenever necessary to ensure these objectives and shall be subject to use, design, and location conditions stated in Easements (Section 5.3.2.b) 4.).

g). ***Sight Triangle***

No improvements shall be placed, nor plant material allowed to grow within the sight triangle so as to obstruct or limit the sight distance of motorists. Such a triangle shall have legs of twenty-five feet (25') along the rights-of-way line when two (2) streets intersect and ten feet (10') along the right-of-way line and the driveway edge when a street and a driveway intersect. The maximum height of any obstruction shall be three feet (3') within the sight triangle, unless otherwise permitted by the Zoning Ordinance.

5.2.*Separability.*

It is hereby declared to be the intention of the Village Board that the several provisions of the Development Standards and Specifications be separable in accordance with the following:

a) ***Separability of Parts***

If any court of competent jurisdiction shall adjudge invalid the application of any provision of the Development Standards and Specifications to be invalid, such judgment shall not affect any other provision of these Development Standards not specifically included in said judgment.

b) ***Separability of Application***

If any court of competent jurisdiction shall adjudge invalid the application of any provision of the Development Standards and Specifications to a particular subdivision of land, such judgment shall not affect the application of said provision to any other subdivision of land, not specif-ically included in said judgment.

5.3.*Construction, Design and Installation Standards For Improvements.*

Any subdivision approved under the Development Standards and Specifications, any development subject to the Development Standards, and any development intending to construct improvements which are addressed in the Development Standards and Specifications, shall comply with the required im-

provements stated herein. Subdividers and developers shall construct all public improvements to specifications and cause the completed improvements to be dedicated to the Village or appropriate agency or unit of government. All private improvements shall be completed as required and approved by the Village. Private improvements shall remain under the ownership of the developer and shall be continuously maintained unless otherwise agreed to by the Village,

5.3.1 ***Site Development, Grading, Erosion, Sedimentation, and Dust Control.***

a) ***Site Development Plans***

Site Development Plans shall include the following information:

1. A vicinity map, in sufficient detail to enable easy location in the field of the site for which plat approval is sought, to include the boundary line, and approximate acreage of the site, a legend and scale.

2. A plan of the site showing:

   a. Existing topography of the site and adjacent land within approximately one hundred feet (100') of the boundaries on subdivisions of three (3) acres or more and twenty-five feet (25') for individual lots, drawn at no greater than two foot (2') contour intervals and clearly portraying the information and drainage pattern of the area.

   b. The location of existing buildings, structures, utilities, water bodies, floodplains, drainage facilities, vegetative cover, paved areas and other significant natural or man-made features on the site and adjacent land within approximately one hundred feet (100') of the boundary.

   c. A general description of the predominant soil types on the site, their location and their limitations for the proposed use.

   d. Proposed use of the site, including present development and planned utilization; areas of excavation, grading and filling; proposed con-tours finished grades and street profiles; provisions for storm drainage; including the control of accelerated runoff, with a drainage area map and computations; types of and locations of utilities; and areas and acreages proposed to be paved, covered, sodded or seeded, vegetatively stabilized or left undisturbed.

      e. The proposed phasing of development of the site, including stripping and clearing, rough grading and construction, and final grading and land-scaping. Phasing shall identify the expected date on which clearing will begin, the estimated duration of exposure of cleared areas; and the sequence of clearing, installation of temporary sediment control measures, installation of storm drainage, paving streets and parking areas, and establishment of permanent vegetative cover.

b) ***Lot Grading***

1. All developments shall provide lot grading in conformance with the Village Building Code, Watershed Development Ordinance, and these Development Standards and Specifications.

2. Except for approved detention and/or retention basins, grading of all lots within the Village shall be accom-plished in such a manner as to prevent ponding in excess of twelve inches (12") in the event of a complete failure of the storm sewer system, parking lots shall be graded such that no ponding in excess of twelve inches (12") occurs in the event of a complete failure of the storm sewer.

3. Grading shall be completed on each lot such that overland water flow is directed away from all sides of the foundation. Unless otherwise approved by the Enforcement Officer all grades on a lot shall be a minimum of two percent (2%) and a maximum of twenty-five percent (25%). If

steeper slopes are approved, sodding, retaining walls or other special treatments may be required to protect the slopes.

4. Finished driveway grades on all lots, as measured from the grade at the property line to the finished garage floor shall be a minimum of one percent (1%) and a maximum of eight percent (8%).

5. Grading plans shall be submitted for all developments and individual lots. The grading plan shall indicate existing grades within one hundred feet (100') of the development on subdivisions of three (3) acres or more and twenty-five feet (25') for individual lots. Prior to final approval and acceptance of public improvements an "as built" grading plan shall be submitted. In cases where individual lot grading is not completed at the time of final acceptance or where public improvements are not required, grading plans for the lots shall be submitted and approved prior to building permits being issued and the "as built" grading plans shall be submitted prior to final occupancy permits being issued.

c) ***Dust Control***

The developer and contractors shall use a water wagon or other acceptable means on the project site to control dust. All streets used by the developer, contractors or suppliers in or adjacent to the development shall be kept free of debris, dirt, dust, and mud. Streets shall be left in a clean condition at the end of each day's work. Developers and contractors who fail to keep streets clean shall be responsible for street cleaning expenses incurred by the Village.

5.3.2. ***Right-of-Way, Development, and Subdivision Standards.***

Subdivisions and developments shall be designed and constructed in accordance with the following standards.

a) ***Public Right-of-Way***

The standards and specifications set forth in this section shall be the minimum standards for streets, roads, and intersections. The arrangement, character, extent, width, grade and location of all streets shall conform to these Development Standards and Specifications and the Comprehensive Plan as adopted by the Village Board. They shall be considered in their relation to existing and planned streets, to topographic conditions, to public convenience and safety, and in their appropriate relation to proposed uses of the land to be served. All public streets shall be completely improved to the full width of the right-of-way. All street improvements shall be extended to the boundaries of the subdivision or development.

1. ***Street Layout and Design***

a. The arrangement of streets shall either:

1) Provide for the continuation of existing streets in surrounding area; or

2) Conform to a plan for the adjacent area adapted to meet a particular situation where topographical or other conditions make continuance or conformance to existing streets impracticable.

b. Local streets shall be so designed to discourage through traffic.

c. Where a parcel abuts or contains an existing arterial or collector street, as shown on the Comprehensive Plan or Official Map, the Plan Commission may recommend and the Village Board may require frontage roads, double frontage lots with screen planting contained in a non-access reservation not less than ten feet (10') wide along the rear property line, scenic easements or such other treatment as may be necessary for adequate protection of residential properties and to separate through and local traffic.

d. When any parcel or part of a parcel is adjacent to only one side of an existing right of way, which is less than the width required by the Development Standards and Specifications, or the Official Map, the applicant shall dedicate additional right-of-way to meet the specifications of these Development Standards and Specifications.

e. Half streets are not permitted.

f. Where adjoining areas are not subdivided, the arrangement of streets in new subdivisions shall be extended to the boundary line of the tract to make provision for the future projection of streets into adjacent areas.

g. Pavement Marking (Thermoplastic) such as Stop Bars, Crosswalks, Center Lane Markings, shall be installed per I.D.O.T. Specifications. Locations to be determined by the Village.

h. Temporary Pavement marking by Painting will be required and must be maintained by the Developer, until such time as the final lift of surface is completed and Thermoplastic is applied.

i. If road width variance given, no parking shall be allowed on roadside with hydrants or in cul-de-sac.

2. ***Right-Of-Way Widths***

All public streets shall be designed and developed in accordance with the standards set forth in this Section, **Table II-1** Minimum Standards for Street and Roadway Design.

TABLE II – 1 MINIMUM STANDARDS FOR PAVEMENT DESIGN

Street	Row Width Feet	Pavement Width Feet	Min. Hor. Curve Radius	Min. Tangent Between Hor. Reverse Curves	Min. Vert. Curve Length	Min. Crown	Max. Gradient	Min. Gradient	Min. Structural Number	Min. Intersect. Curb Radius
Arterial	100' (c)	*	*	*	*	*	*	*	*	*
Major	80' (c)	44 (B-B) curb & gutter	500'	200'	200'(b)	5.1"	5%	0.50%	5	50'
Collector	60' (c)	39 (B-B) curb & gutter	275'	200'	100'(a)	4"	5%	0.50%	4.5	40'
Minor	60' (c)	31 (B-B) curb & gutter	100'	75'	100'(a)	3.0"	7%	0.50%	3.2	30'
Cul-de-Sac	60' (c)	31 (B-B) curb & gutter	100'	75'	100'(a)	3.0"	7%	0.50%	3.2	30'
Business/ Industrial	80' (c)	39 (B-B) curb & gutter	500'	200'	100'(a)	6.0"	3%	0.50%	4	50'

(a) Forty feet (40') for each one percent (1%) of algebraic difference of grade, but in no case less than one hundred feet (100').

(b) Fifty feet (50') for each one percent (1%) of algebraic difference of grade, but in no case less than two hundred feet (200').

(c) The right-of way shall be reserved for Village owned utilities or facilities only. An additional ten (10) foot easement adjacent to the right-of-way shall be provided for utilities other than those owned/maintained by the Village.

* Per IDOT/LCDOT Standards.

3. ***Intersections and Offsets***

a. Streets shall intersect at ninety (90) degrees whenever possible. No two (2) streets shall intersect at an angle of less than seventy-five degrees (75°). An oblique street should be curved ap-proaching an intersection and should be at right angles for a minimum of one hundred feet (100') therefrom.

b. No more than two (2) streets shall intersect at any one point.

c. Proposed intersections along one side of an existing street shall, whenever practicable, coincide with any existing intersections on the opposite side of such street. Street or driveway

jogs with centerline offsets of less than one hundred fifty (150') feet shall not be permitted and jobs with centerline offsets of less than two hundred twenty-five feet (225') between local and collector or arterial streets shall be discour-aged, except where the intersected street or driveway has separate dual drives without median breaks at either intersection.

d. Intersections shall have minimum curb radius of twenty-five (25) for minor streets, thirty (30) feet for collector streets, and forty (40) feet for arterials.

e. Provisions shall be made for vehicular and pedestrian access to residential property abutting an arterial street either by providing: (a) a marginal access street, or (b) by backing lots to the thoroughfare and providing access by a collector, local, or cul-de-sac street one (1) lot depth removed and with a no-access strip easement not less than ten feet (10') wide along the rear lot line. These standards are established for the purpose of providing protection for the residential properties and to provide for traffic safety and the efficient use of the major street for its intended function of accommodating through traffic.

f. When an existing lot's only access is from an arterial street, the intersection of a proposed driveway with the arterial street may require the installation of acceleration/deceleration lanes along the arterial street to provide for vehicular safety.

g. A clear line of sight shall be provided at all intersections. (See Section 5.1.2.g)).

4. ***Frontage Access***

a. Frontage access streets may be required to provide access to adjacent land and adequate vehicular safety when property to be developed is adjacent to an arterial. Whenever a frontage access street is to be dedicated to public use, it shall conform with the requirements of the Development Standards regarding right-of-way and improvement specifications.

b. Frontage access streets shall be approximately parallel to the arterial.

c. Where possible, minimum distance of seven hundred fifty feet (750') shall be required between points of ingress and egress to the arterial.

5. ***Cul-de-sacs***

Cul-de-sacs may be permitted in subdivisions where land availability, site planning, or traffic control purposes determine a through street is not practicable.

a. The maximum length of a cul-de-sac shall be one thousand feet (1,000') (residential) and fifteen hundred feet (1,500') (commercial), as measured from its origin with the right-of-way of the intersecting street through the center point of the bulb to the end of the right-of-way.

b. The bulb of a cul-de-sac shall have a minimum right-of-way of one hundred twenty feet (120') in diameter or, if offset, one hundred ten feet (110') in diameter.

c. The bulb of a cul-de-sac shall have a minimum pavement diameter of ninety feet (90').

d. A maximum of five (5) lots shall have frontage on the bulb of a cul-de-sac.

e. All Cul-de-sacs must have a center island.

f. All Cul-de-sacs shall be designated "No Parking Fire Lane" on both sides of street.

g. Signage shall be posted by developer.

6. ***State or County Approvals***

Any construction within or changes to rights-of-way under the jurisdiction of the State of Illinois, County, or Township shall require the approval of that jurisdiction in addition to Village Board approval before any construction is allowed to begin.

7. ***Street Names***

   a. Streets that are extensions of, or in alignment with, existing streets shall bear the name of the existing street. All new street names shall be reviewed and approved by the Wauconda Police Department and Wauconda Fire Protection District.

   b. The developer shall place street signs at the intersection of any two (2) streets to identify all streets. Signs and poles shall be of a type, dimension, color, height, and location as required by the Village. Signs to be mounted on street light poles where applicable.

   c. Location of all traffic control signs will be designated by Police Chief.

   d. Sign post will be square per Village specifications.

8. ***General Pavement Design and Specifications***

   The arrangement, character, extent, width, grade and location of all streets to be dedicated to the public, all parking lots and all private streets shall be compatible and complimentary to existing planned streets, to reasonable circulation of traffic within any development and adjoining convenience and safety, and in their relations to the proposed uses of the area to be served. All traffic intersec-tions and confluences must encourage safe and efficient traffic flow.

   a. ***Design References***

      All pavements shall be designed in accordance with one (1) or more of the following references as they apply:

      1) Manual for Structural Design of Portland Cement Concrete Pavement, Illinois Department of Transportation, latest edition.

      2) Design Manual, Illinois Department of Transpor-tation, latest edition.

      3) Standard Specifications for Road and Bridge Construction, Illinois Department of Transportation, latest edition.

      4) The Village Development Standards and Specifications.

   b. ***Pavement Design***

      1) All pavement shall be designed in accordance with any of the previously referenced specifications and manuals. The design thickness shall be dependent on the soil support value - Illinois Bearing Ratio (IBR) - and the projected traffic factor; however, in no case, shall the total section thickness be less than those shown in **Table II-2** nor the structural number less than that calculated from the tabulated sections. A copy of all design assumptions and computations shall be submitted to the Village Engineer for review and approval and a duplicate copy shall be submitted to the Director of Building, Zoning, and Economic Development.

      2) All subgrade material shall have a minimum IBR of 3.0. The soil support IBR values selected for use by the design engineer shall represent a minimum value for the soil to be used. Copies of the test for IBR values for each material used shall be submitted to the Village Engineer.

      3) Allowable pavement construction material and strength requirements shall be as indicated in **Table II-2.**

TABLE II-2 ALLOWABLE PAVEMENT CONSTRUCTION MATERIALS

STRUCTURAL MATERIALS	STRENGTH REQUIREMENTS		
	*M.S.	I.B.R.	P.S.I.
Bituminous Surface			
Class I - Surface and Binder	1700		
Base Course			
Aggregate, Type B - Crushed (100%)		80	
Bituminous Aggregate - Mixture		Minimum 1200	
Bituminous Base Course	1700		
Portland Cement - Concrete (new)			3500**

* Marshall Stability

** 28-day Design Compressive Strength in pounds per square inch w/Welded Wire Fabric Reinforcing

c. ***Grades***

1) Minimum gradient on streets shall be five-tenths percent (0.5%). Maximum gradients on streets and minimum and maximum gradient on driveways shall be:

a) Local streets – seven percent (7%) maximum.

b) All other streets – five percent (5%) maximum.

c) Residential Driveway – one percent (1%) minimum, eight percent (8%) maximum.

d) All Other Driveways – two percent (2%) minimum, six percent (6%) maximum.

e) When intersecting an owned and maintained I.D.O.T. or L.C. street, allow six percent (6%) maximum.

d. ***Vertical Curves***

Vertical curves shall be constructed at all changes in street gradient except at summits and low points where the algebraic difference in gradients is less than one and one-half percent (1½%) at the summits or low points with gradient differences one and one-half percent (1½%) and at all other locations of gradient changes up to one and one-half percent (1½%), a one hundred foot (100') vertical curve shall be constructed. Shorter vertical curves at low points may be considered when approved by the Village Engineer. For each additional one percent (1%) difference in gradient over one and one-half percent (1½%) a fifty foot (50') increment shall be added to the length of the vertical curve.

e. ***Horizontal Curves***

Horizontal curves may be permitted. The minimum radius for horizontal curves shall be two hundred feet (200') for minor streets and four hundred feet (400') for all other streets. Minimum one hundred foot (100') tangents shall be introduced between reverse curves on all streets.

f. ***Curb and Gutter***

1) Combination curb and gutter type B6:12 shall be constructed on both sides of all streets. Depressed curbs shall be provided at all driveways, regardless of curb type. Intersection sidewalk crossings shall be ramped for the handicapped.

Saw cutting the back of curb in lieu of a formed depressed curb will not be permitted.

2) Two (2) number four (4) reinforcing bars shall be placed continuously. Expansion joints shall be doweled and spaced at no more than sixty feet (60') on center and at tangent points of all radii. Control joints shall be provided and spaced at no more than fifteen feet (15') on center and shall consist of a saw cut minimum of one and one-half inches (1½") deep.

3) Any curb and gutter replacement must be at least eight feet (8') in length.

g. ***Pavement Construction***

1) All pavements shall be constructed in accordance with:

Standard Specifications for Road and Bridge Construction, Illinois Department of Transportation, latest edition, except as provided herein, and the Village Development Standards and Specifications.

2) Not less than one (1) modified proctor density test performed in accordance with AASHTO T99, shall be taken on each type of material used for embankment or encountered in the subgrade.

3) Density tests on embankment and subgrade materials shall be performed by a qualified and approved soils engineer in accordance with AASHTO T191 or by other methods approved by the Enforcement Officer. The density tests shall be taken at maximum fifty foot (50') spacings. Embankments and subgrade shall be compacted to no less than ninety-five percent (95%) of the standard laboratory density. Copies of all density tests results shall be submitted to the Village Engineer.

4) Upon completion of the compaction of the embankment and subgrade a roll test with a fully loaded single rear axle six (6) wheel truck shall be done at the direction of the Village Engineer prior to placing any type of curb and gutter or base material.

5) After grading of the streets is completed and approved and before the base course of the roadway pavement is installed, all of the underground work, including sewer, connections therewith and any conduits for electric and telephone lines shall be completely installed in place and approved.

6) Density tests on base course and surface course materials shall be performed by a qualified and approved soils and materials engineer by methods approved by the Village Engineer. The density test shall be taken at maximum one hundred (100) foot spacings. Copies of all density test results shall be submitted to the Village Engineer. Upon completion of the compaction of the base course, a roll test with a fully loaded single rear axle six (6) wheel truck shall be done at the direction of the Village Engineer.

7) Binder course shall be constructed following approval by the Village Engineer of the base course construction.

8) Construction of the Surface Course shall be delayed for one winter season, but under no condition shall such Course be installed prior to one hundred percent (100%) occupancy of all homes in the phase after construction of the Binder Course unless otherwise directed by the Village Engineer.

h. ***Materials Testing***

All materials shall meet the requirements of the Standard Specifications for Road and Bridge Construction, Illinois Department of Transportation, latest edition. Concurrent with the construction of any pavement the developer shall furnish the Enforcement Officer, as

applicable, with copies of the certificates of testing from the Illinois Department Bureau of Materials or an approved testing laboratory. Developer to pay all fees.

i. ***Driveways and Parking Areas***

1) Driveways for single family residential buildings shall be a minimum of twelve feet (12') in width for one (1) car garages and a minimum of eighteen feet (18') in width for two (2) car garages as measured at the right of way line. All driveways shall extend to the curb or edge of pavement and shall be three feet (3') wider at the curb.

The maximum width of driveways when measured at the property line in residential areas shall not exceed twenty-four feet (24'), except in cases of houses with three (3) car garages facing the street, the driveway width at the property line may be increased to thirty -two feet (32'). A recommendation from the Enforcement Officer and approval from the Village Board are required for more than one (1) driveway per lot. All materials must be in accordance with standard specifications for road and bridge construction latest edition as published by IDOT.

2) Driveways and parking areas for residential uses shall be constructed of:

a) Minimum six inch (6") concrete with a minimum four inch (4") compacted aggregate base course, or

b) Minimum two inches (2") Asphalt Surface Course with a minimum six inch (6") compacted aggregate base course, or

c) Concrete Pavers, as determined by the Village Administrator with a minimum six inches (6") compacted aggregate base course.

3) Light commercial and industrial driveways and parking areas shall have a width equal to the approved driveway width at the property line. The driveway approach shall have a minimum fifteen foot (15') radius return at the street and shall be constructed of:

a) Minimum eight inch (8") concrete with a minimum four inch (4") compacted aggregate base course, or

b) Minimum one and one-half inch (1½") Hot Mix Asphalt Surface Course, and one and one-half inch (1½") Hot Mix Asphalt Binder Course with either a minimum eight inch (8") compacted aggregate base course or a minimum six inch (6") Hot Mix Asphalt Binder Course.

4) Heavy commercial and industrial driveways and parking areas or when, in the opinion of the Enforcement Officer, the driveway and parking area will be required to support heavy loads, shall have a minimum fifteen foot (15') radius return at the street. Where larger equipment (semi-trucks) is in use, the radius return may be increased to thirty-five feet (35') to prevent damage to the parkway. The driveway shall be constructed of:

a) Minimum eight inch (8") concrete with a minimum eight inch (8") compacted aggregate base course, or

b) Minimum one and one-half inch (1½") bituminous concrete superpaved surface and one and one-half inch (1½") bituminous concrete superpaved binder with either a minimum twelve inch (12") compacted aggregate base course or a minimum six inch (6") Hot Mix Asphalt Binder Course.

5) Any open off-street loading berths, loading areas or areas intended to be used for dumpsters over two (2) cubic yards capacity, the parking of semi-trailers without tractor attached or other heavy concentrated loads, shall be constructed of:

a) Minimum six inch (6”) concrete with a minimum ten inch (10”) compacted aggregate base course.

b) All concrete for driveways and parking areas shall be air entrained, six (6) bag portland cement concrete with minimum 6 x 6 - W1.4 x W1.4 welded wire fabric reinforcing or fiber mesh in accordance with manufacturer’s recommendations.

j. ***Sidewalks***

Sidewalks shall be provided within all developments. Sidewalks shall be constructed along both sides of all streets unless otherwise approved by the Village Board and shall be five feet (5’) in width. All existing sidewalks of four (4) feet shall have a minimum twenty-five feet (25’) transition length when joining to a five foot (5’) wide sidewalk. When matching existing sidewalks or when otherwise approved by the Village Board, sidewalks shall be located within the public right-of-way one foot (1’) from the right-of-way line, unless otherwise approved.

1) ***Construction***

a) Sidewalks shall conform to the requirements of Article 624, Portland Cement Concrete Sidewalk, Standard Specifications for Road and Bridge Construction, Illinois Department of Transportation, latest edition, except as provided herein, and the Development Standards and Specifications.

b) Sidewalks shall be a minimum of six (6) inches thick.

c) Three (3) number five (5) reinforcing bars ten feet (10’) long shall be placed in the sidewalk at all trench crossing locations.

d) Control joints shall be placed at five foot (5’) spacings and appropriate expansion joints shall be provided at fifty foot (50’) spacings.

e) Sidewalks shall be placed on a minimum four inch (4”) thick well-compacted crushed stone base course.

f) Where existing sidewalk is joined to new, two (2) reinforcing bars will be used.

k. ***Bike Paths***

Whenever constructed within the Village, bike paths shall conform to the following standards:

1) Bike paths shall be a minimum eight feet (8’) in width to provide for two-way traffic.

2) The minimum construction of any bike path shall consist of a four inch (4”) thick type B aggregate base course with a two and one-half inch (2½”) thick Hot Mix Asphalt Binder Course and one and one-half inch (1 ½”) Hot Mix Asphalt Surface Course.

3) Bike paths shall have removable posts placed at all locations necessary to prevent vehicular traffic from entering the paths.

4) Construction of any bike path shall conform to the Standard Specifications for Road and Bridge Construction, Illinois Department of Transportation, latest edition, except as provided herein, and the Development Standards.

5) Bicycle lanes shall be appropriately marked and striped.

b) ***Subdivision Standards***

The design and layout of lots within any subdivision shall conform to the requirements stated in these Development Standards and Specifications.

1. ***Blocks***

   a. The length, width, and shape of blocks shall be determined by the proposed uses, the zoning requirements of the Village, topography, and convenient access, circulation, control and safety of vehicular and pedestrian traffic.

   b. The maximum length of a block in a residential subdivision shall not exceed one thousand two hundred feet (1,200'). The minimum length shall be four hundred feet (400').

   c. The width of any block shall be sufficient for two (2) tiers of lots unless such block abuts an arterial street, water course, railroad right-of-way, shopping center, or major public facility, or such other use as approved by the Village Board.

   d. Pedestrian crosswalks may be required, in a minimum ten foot (10') easement, through the center of blocks which exceed one thousand feet (1000') in length or where necessary to provide access to arterial streets, shopping centers, or public facilities.

2. ***Lots***

   The size, width, depth, and shape of lots shall be appropriate for the location and type of development and use proposed and shall conform to the regulations set forth in the Zoning Ordinance and these Development Standards and Specifications.

   a. Through lots shall be avoided except where essential to provide separation of residential development from arterial streets. Access to the arterial street from single family residential lots shall be prohibited by deed restriction and a no-access easement. A planting screen with a minimum height of four feet (4') shall be provided along all lot lines abutting the arterial street except at corners to allow for vision clear-ance.

   b. Whenever possible, on all corner lots abutting an arterial street, access shall be prohibited to the arterial street.

   c. Lots abutting a water course, drainage way, channel or stream shall have a minimum width or depth required to provide an adequate building site.

   d. All lots shall have frontage on a public street.*(Amended per Ordinance No. 1996-0-18)*

   e. Side lot lines shall be substantially perpendicular to the right-of-way; however, lots on a cul-de-sac shall have side lot lines radial to the center of the cul-de-sac.

3. ***Setback Lines***

   a. Required setbacks shall be indicated on all plats of subdivision in accordance with the Zoning Ordinance.

   b. For all corner lots, the minimum building setback on the side street side shall be not less than the front yard required or as otherwise provided in the Zoning Ordinance.

4. ***Easements***

   a. There shall be a dedicated easement with a minimum width of twenty feet (20') at the rear of all lots, or ten feet (10') centered on adjacent rear lot lines, and a minimum of six feet (6') in width where necessary along side lot lines to provide continuity for public utilities and/or drainage as determined by the Village Engineer and in accordance with the Subdivision Ordinance. In addition, due provision shall be made for extension of

easements to adjacent property, unless approved otherwise. Electric, telephone and cable shall be located in rear, or side yard easements.

b. All utility easements shall be approved by the public utility companies, cable television franchises, and the Village Board and shall be so indicated on any final plat.

c. Easements for pedestrian access shall be a minimum of ten feet (10') in width.

d. Where a subdivision is traversed by a water course, drainage way, channel or stream, a drainage easement shall be provided, conforming to the dimensions of such water course and such additional width as necessary for access and maintenance as required by the Village Engineer.

e. An easement a minimum of the ten feet (10') in width shall be provided, measured from the established shore line of all bodies of water, and where necessary a minimum ten foot (10') wide access easement to a public roadway.

f. No building, structure, or other permanent obstruction shall be constructed upon any easement.

5.3.3. ***Sanitary Sewer System.***

a) Except as otherwise provided herein, no residential, commercial or industrial subdivision or development including single lots shall be approved unless it is served by sanitary sewers connected to the Village sewerage system.

1. In the case of any buildings, residential, commercial or industrial, constructed prior to the adoption of the Development Standards and served by a septic system, the following shall apply:

   Any building located within the Village, the property line of which building is located within four hundred feet (400') of a sanitary sewer main line, shall have its sanitary sewer facilities connected to the said sanitary sewer main line. Any parcel and/or building located outside the Village shall be required to annex into the Village prior to connecting onto the Village sewerage system, and any and all expenses incurred to extend said sewer would be totally at the property owner's expense.

2. Before commencing the sewer layout, the developer shall confer with the Village Engineer to determine the required size and grades for any trunk sewers traversing the subdivision or lot to fit the Village's available capacities of offsite downstream existing facilities with the estimated increment of flow caused by the subdivision, proposed development, and any future offsite development. Construction required to accommodate said increment shall be submitted as part of engineering plans. Sanitary sewers shall be extended to the far edge of the development and at other locations indicated by the Village Engineer.

3. All sanitary sewers shall be extended to the far property line and shall be constructed within public rights-of-way or within approved easements dedicated for public utilities.

4. All attached and detached single family dwelling units shall be served by separate sanitary sewers services to be directly connected to the Village sewerage system and not to be of common service.

b) ***Sanitary Sewer System Design***

1. ***Sewer Mains***

Sewer mains shall be designed according to these Development Standards and all other applicable regulations and requirements.

2. ***Sewer Design Flows***

   a. Design flows for all residential developments shall be based upon fill development of the service area within the population served, estimated as follows:

Type of Dwelling Unit	Number of Persons
Studio	1
1 Bedroom	2
2 Bedroom	3
3 Bedroom	4
4 Bedroom	5

   For undeveloped areas where the details of future developments are not known, design population per acre may be estimated, based on Village's current Comprehensive Plan.

   b. Design flows for nonresidential developments shall be based on full development of service area including any process water requirements with the maximum daily per capita design flow estimated based on generally accepted engineer-ing principles and standards approved by the Village Engineer.

   Such flow estimate shall not relieve the owner or developer of the responsibility of providing adequate sewer capacity to meet any and all future requirements within the development.

   c. The design of maximum sewage flow and capacity shall be based on estimated populations for all proposed developments and the ratio of peak flow to daily average flow equation as found in the "Illinois Design Standards for Sewage Works".

3. ***Minimum Sewer Size***

   a. Minimum sanitary sewer size shall be eight inch (8") diameter.

   b. Minimum building sanitary service sewer size shall be six inch (6") diameter.

4. ***Alignment***

   Sewer shall be laid straight in both horizontal and vertical planes between manholes, unless otherwise approved by the Village Engineer. Curvalinear sewers shall not be permitted.

5. ***Sewer Size Changes***

   Sanitary sewer of different diameter shall join only at manholes, except that a 4" x 6" increaser may be used for a single family detached dwelling if a sweep bend tee wye cleanout is provided five feet (5') outside the house foundation when approved by the Enforcement Officer. The invert eleva-tions shall be adjusted to maintain a uniform energy gradient by matching the 0.8 depth points of different diameters.

6. ***Sanitary Sewer Manholes***

   Manholes shall be provided at the following:

   a. ***Manhole Locations***

      Manholes shall be provided at the following:

      1) Termination of existing and future lines

2) Changes in direction, horizontal or vertical

3) Changes in shape or pipe size

4) Junctions with other sewers

5) For inspection and sampling where required by the Enforcement Officer.

6) Access spacing shall be a maximum of four hundred feet (400').

b. ***Drop Manholes***

A drop manhole shall be provided for any manhole with a pipe having a difference in invert eleva-tion of more than twenty-four inches (24") above the invert of the sewer leaving the manhole.

c. ***Manhole Diameters***

1) Manholes for sanitary sewers twenty-four inches (24") or less in diameter shall have a minimum inside diameter of forty-eight inches (48").

2) Manholes for sanitary sewers twenty-seven inches (27") or larger in diameter shall have a minimum inside diameter of sixty inches (60").

7. ***Sanitary Sewer and Stormwater Lift Stations***

Whenever possible, sanitary sewerage facilities shall be designed so as to avoid the necessity of providing lift stations.

a. If a lift station is part of the engineering design, it shall be shown in plan elevation. Specifications for said lift station shall be submitted with engineering plans. Lift station shall be of the wet well type, and shall conform in all respects to the standards established by the Village Engineer and the State of Illinois Environmental Protection Agency.

b. A separate standby generator with automatic transfer switch shall be provided with any lift station. The generator, transfer switch, control and alarm panels shall be housed in a stand alone building or other approved structure. The generator and lift station equipment shall be connected to the Village's SCADA system, as part of the development requirement. The design and specifications shall be in accordance with all Village Standards and Specifications.

c) ***Allowable Materials***

1. ***Sewer Pipe***

a. Ductile Iron Pipe - shall conform to the requirements of ANSI A21.51, Class 52 with hydrogen sulfide resistant lining with ANSI A-21.4, standard thickness.

b. Thick Walled PVC Pipe - shall conform to the requirements of A.S.T.M. D-2241 or D-3034 SDR (26) as a minimum.

2. ***Force Main***

a. High density polyethylene (HDPE) with two (2) tracing wires.

b. P.V.C. Pipe - shall conform to A.W.W.A. Specifi-cation C-900 SDR-18 with two (2) tracing wires.

3. ***Pipe Joints***

a. Ductile iron pipe - A.N.S.I. A-21.11 (A.W.W.A. C-111).

b. P.V.C. thick walled pipe - A.S.T.M. D-3212 and F-477).

4. **Casey Pipes for Auger or Tunnel Installation**

   a. Steel Sleeves - shall be three eights inches (3/8”) thick, of the diameter specified, with a continuous, circular one-half inch (½”) bead weld and shall meet the requirements of A.S.T.M. A-120.

5. ***Manholes***

   a. Precast reinforced concrete - A.S.T.M. C-478 and A.S.T.M. C-443.

   b. Adjustment - no more than two (2) precast concrete adjusting rings with an eight inch (8”) maximum height adjustment.

   c. Pipe and Frame Seals - all pipe connection openings shall be precast with resilient rubber, water tight, pipe to manhole sleeves.

   d. Bottom Section - all bottom sections for new sewer lines shall be monolithically precast including bases and invert flowlines. Provide separate base for existing sewer lines.

   e. Joints - preformed bitumastic plastic gaskets to completely seal manhole joints (MAR-MAC, or equal).

   f. External chimney seal

   g. All sanitary sewer manholes to be vacuum tested

   h. All manholes to be bitumastically sealed

   i. Preformed concrete benches

6. ***Castings***

   a. Manhole frame and cover - Neenah No. R-1712 or approved equal, with self-sealing lid, embossed "SANITARY".

   b. Manhole steps - Neenah No. R-1981-I, or approved equal.

   c. Recessed pickholes shall be required.

   d. Frames and covers for manholes located within floodplain areas shall have a rim elevation two feet (2’) above the flood protection elevations and shall be watertight, lock-type covers - Neenah No. R-1916-C or approved equal.

7. ***Granular Pipe Bedding and Covering Materials***

   a. Well graded, washed, mixture of gravel or crushed stone aggregate free of clay, loam, dirt, calcareous or other foreign matter con-forming to the IDOT "Standard Specifications" gradation No. CA11, or the Standard Specifica-tions for Water and Sewer Construction in Illinois granular cradle Type B, with the following gradation:

Sieve Size	Percent Passing
1-inch	100%
3/4-inch	84-100%
1/2-inch	30-60%
No. 4	0-12%
No. 16	0-6%

   b. For flexible thermoplastic pipes including sewer pipes and sewage force mains: Comply with ASTM D2321, Class I or II as modified below.

1) Exclude sharp angular granular materials.

2) Limit maximum particle size to 1/2-inch.

3) Do not use Class II materials in wet conditions.

8. ***Special Granular Backfill Materials***

a. Provide either sand, pit run gravel, granular material, or excavated granular materials.

1) Sand: Well graded, free from organic mat-ter, cohesionless, complying with the IDOT Standard Specification gradation No. FA 6.

2) Pit run gravel: Free from organic matter, cohesionless granular material obtained from natural deposits of sand and gravel, passing 3/4-inch sieve, and not more than fifteen percent (15%) passing the No. 200 sieve.

3) Granular material: Use 100 percent crushed stone or gravel complying with the IDOT "Standard Specifications" gradation No. CA 6.

4) Excavated granular materials: A mixture of sand and gravel, free from organic matter, clay, loam, dirt, and other foreign materi-al, passing the 1½ inch sieve, and not more than fifteen percent (15%) passing the No. 200 sieve.

d) ***Construction Requirements***

All sanitary sewers shall be constructed in accor-dance with the provisions of Standard Specifications for Water and Sewer Main Construction in Illinois, latest edition and these Development Standards and Specifications.

1. ***Approval and Permits***

Construction of sanitary sewers and/or sewer service shall not commence until engineering plans and specifications have been approved by the Village Engineer and permits for construction of the sewers have been issued by the Village and the Illinois Environmental Protection Agency.

2. ***Excavation and Foundation***

a. The trench shall be excavated so that the flow line of the finished sewer shall be at the depth and grade shown on the approved plans. The trench for the pipe shall be excavated at least twelve inches (12”) wider than the external diameter of the pipe. The width of the trench shall not exceed the external diameter of the pipe by more than eighteen inches (18”) at the top of the pipe.

If the excavation has been deeper than neces-sary, the foundation shall be brought to proper grade by the addition of well-compacted bedding material. Where a firm foundation is not encountered at the grade established, due to soft, spongy or other unsuitable soil, (unless other special construction methods are called for on the plans or in the special provisions), all such unsuitable soil under the pipe and for the width of the trench shall be removed and replaced with well-compacted bedding material.

b. The pipe shall be laid so that it will be uni-formly supported and the entire length of the pipe barrel will have full bearing. No blocking of any kind shall be used to adjust the pipe to grade except when used with embedment concrete. Bedding shall be required for all sewer and forcemain construction, and shall be a minimum thickness equal to one fourth (¼) of the outside diameter of the sewer pipe but shall not be less than four inches (4”).

Note that when PVC pipe is used, the bedding material shall extend to twelve inches (12”) over the top of the pipe and shall be compacted to the satisfaction of the inspector.

Where required by external loading or soil conditions, concrete bedding shall be substituted for granular bedding.

c. ***Pipe Laying***

1) Pipe shall be laid straight both horizontally and vertically between manholes.

2) Pipe laying and joining shall be done in accordance with the pipe manufacturer's recom-mendations.

3) Pipe shall not be dropped from delivery vehicles. All pipe shall be lowered into the trench with a suitable apparatus; in no case shall the pipe be dropped or thrown.

d. ***Connections***

1) Connections to the sewer main shall be done by means of a wye fitting installed e main.

2) When the sewer mains are deeper than twelve feet (12’), risers shall be installed at connections such that service pipe shall be no more than twelve feet (12’) deep.

3) Unused wye fittings shall have socket ends sealed by water tight rubber or plastic stoppers suitably fastened or braced to prevent dislodg-ing by back pressure from the main line.

4) Connections to existing sewer mains shall be made by installing a new wye fitting or by use of a circular sawcut by proper tools ("sewer tap" machine or similar) and installation of a wye saddle in accordance with manufacturer's recommendations. All such connections shall be done in the presence of the Village Inspector.

e. ***Sewer Depth***

Sanitary sewers shall be constructed sufficiently deep so as to prevent freezing. For the purposes of this specification, a depth of not less than five feet (5’) to the sewer invert shall be required unless otherwise approved by the Enforcement Officer. In addition, they shall be sufficiently deep to provide an outfall for all sanitary sewage within the ultimate service area, both existing and future.

f. ***Backfilling***

1) Backfilling shall not be done until installation of the sewer has been inspected and approved by the Village Inspector.

2) Backfill to four inches (4”) above the top of the pipe, except flexible thermoplastic pipe, shall be done with material conforming to bedding material placed in six inch (6”) lifts compacted to ninety-five percent (95%) maximum dry density as determined according to ASTM D1557 or AASHTO - T180.

3) Excavations for sewers which are beneath any existing or proposed pavements, driveways and sidewalks and any trenches where the inner edge is within two feet (2’) of such areas shall be backfilled with Special Granular Backfill Mate-rials in twelve inch (12”) lifts compacted to nine-five percent (95%) maximum dry density as determined according to ASTM D1557 or AASHTO - T180.

4) Excavations for sewers not beneath or within two feet (2’) of existing or proposed paved areas shall be backfilled with material excavated from the trench, unless such material is determined to be unsuitable by the Village Inspector. The material shall

be free from clods and rocks and shall be placed in twelve inch (12") lifts, compacting each lift to yield a minimum of eighty-five percent (85%) of maximum dry density as determined according to ASTM D1557 or AASHTO - T180.

g. ***Inspection and Testing***

1) ***T.V. Testing***

Upon completion of construction and prior to accep-tance of this sewer system and again prior to expi-ration of the maintenance guarantee, an internal inspection of the sanitary sewers shall be televised using a Pan & Tilt feature on the equipment. The T.V. inspections shall be done by the contractor and witnessed by the Village Inspector. All deficiencies noted during the T.V. inspection shall be repaired by the contractor at his expense by means approved by the Village Engineer. A written report and a color, DVD of the inspection shall be supplied to the Enforcement Officer.

2) ***Sanitary Sewer Testing***

Prior to Village approval of the sanitary sewer system and before any connections are made, the system shall have passed air tests in accordance with Section 31 of the standard specifications and shall be conducted by the contractor and as selected by and witnessed by the Village Inspector. In the event that air testing is not possible, the village may require an infiltration and/or exfiltration test to be conducted. If so, the procedures described in Section 31 of the standard specifications shall govern.

h. ***Sanitary Sewer Services***

Sanitary sewer services shall be constructed as provided herein.

1) ***Description***

A sanitary sewer service line, for the purposes of these Standards, is defined as a sewer pipe designed to receive flow from a single building, extending from the sewer main or lateral to the building.

2) ***Minimum Diameter/Material***

Minimum diameter of sanitary sewer service lines is six inches (6"). If the service line is larger than six inch (6") diameter, a manhole shall be constructed at the point of its connection with the sewer main or lateral. Allowable service material is as shown in (Section 5.3.3.b.7.c)).

3) ***Design Standards***

Capacity requirements and design details described in (Sections 5.3.3.b) through 5.3.3.d)) for sanitary sewers shall apply to sanitary sewer service lines, except the minimum slope shall be one-eighth inch (1/8") per foot.

4) ***Plugs***

In those instances when the service line is not immediately connected to the building to be served, it shall be plugged, using a manufactured plug held in place.

5) ***Sanitary Sewer Service Line Connections***

When sanitary sewer service lines are constructed as part of the same project as the sewer main or later-al, they shall be connected to the sewer main or lateral using a wye.

When a sanitary sewer service line is to connect to an exiting sewer main or lateral, or where specific approval has been granted by the Village Engineer for the construction of a service line after the completion of the sewer main or lateral, the connection shall be made by one of the methods detailed below or as provided in Section 5.3.3.d).2.d.:

a. Installation of a manhole.

b. Using the pipe cutter, neatly and accurately cut out desired length of pipe for insertion of proper fittings. Use "Band-Seal" couplings, or similar couplings, and shear rings and clamps to fasten the inserted fitting and hold it firmly in place. Follow manufacturer's recommendations for the installation. Cement joints are prohibited.

i. ***Ownership of Sanitary Sewer System***

All rights, title and interest in and to the sanitary sewers to be accepted by the Village shall vest in the Village.

5.3.4. ***Storm Water Drainage and Storage Facilities.***

All developments, whether public or private shall include provisions for the construction of a storm water runoff conveyance system. When required, a storm sewer system shall be separate and independent of the sanitary sewer system.

All streams, channels, or storm sewers shall be designed to accommodate storm water runoff from all areas which naturally flow to the area of development.

a) ***Allowable Materials***

1. ***Sewer Pipe***

a. Reinforced Concrete Pipe (RCP) - shall conform to the requirements of ASTM C76. Use Class III for depths of fourteen feet (14’) or less and Class IV for depths greater than fourteen feet (14’).

b. Elliptical Concrete Pipe (ECP) - shall conform to the requirements of ASTM C507. Use Class HE-III as a minimum.

c. Solid Wall PVC Pipe - Sizes ten inch (10”) through fifteen inch (15”) shall conform to the requirements of ASTM D304 for Type PSM polyvinyl chloride sewer pipe of minimum wall thickness SDR 26. Sizes eighteen inch (18”) through twenty-four inch (24”) shall conform to the require-ments of ASTM F679 for large diameter sewer pipe of minimum wall thickness T-1.

2. ***Pipe Joints***

a. Reinforced Concrete Pipe (RCP) - ASTM C443.

b. Elliptical Concrete Pipe (ECP) - Mastic.

c. Solid Wall PVC Pipe - Sizes ten inch (10”) through fifteen inch (15”): ASTM D1869 and D3212. Sizes eighteen inch (18”) through twenty-four inch (24”): ASTM F477 or D3212.

3. ***Manholes, Catch Basins and Inlets***

a. Precast reinforced concrete ASTM C-478.

b. Joints - preformed bituminous plastic gaskets to be sealed with Martlac seal, or equal.

c. Adjustment - no more than two (2) precast con-crete adjusting rings with an eight inch (8”) maximum height adjustment.

4. ***Castings***

a. Inlet and catch basin frames and grates in paved areas shall be Neenah R-2504-C frames with Type D grates, or approved equal.

b. Inlet and catch basin frames and grates in grassed areas shall be Neenah R-4340-B, or approved equal.

c. Manhole frames and grates shall be "STORM".

d. Steps shall be Neenah R-1981-I or approved equal.

e. Open grates stamped “Do not dump. Drains to lake.”

f. All storm sewer outlets ten (10) inches in diameter and larger shall be fitted with an aluminum grate in accordance with the applicable standard drawing as established by IDOT.

5. ***Granular Pipe Bedding and Covering Materials***

a. Well graded, washed, mixture of gravel or crushed stone aggregate free of clay, loam, dirt, calcareous or other foreign matter con-forming to the IDOT "Standard Specifications" gradation No. CA11, or the Standard Specifica-tions for Water and Sewer Construction in Illinois granular cradle Type B, with the following gradation:

Sieve Size	Percent Passing
1-inch	100%
3/4-inch	4-100%
1/2-inch	30-60%
No. 4	0-12%
No. 16	0-6%

b. For flexible thermoplastic pipes: Comply with ASTM D2321, Class I or II as modified below.

1) Exclude sharp angular granular materials.

2) Limit maximum particle size to 1/2-inch.

3) Do not use Class II materials in wet conditions.

6. ***Special Granular Backfill Materials***

a. Provide either sand, pit run gravel, granular material, or excavated granular materials.

1) Sand: Well graded, free from organic mat-ter, cohesionless, complying with the IDOT Standard Specification gradation No. FA 6.

2) Pit run gravel: Free from organic matter, cohesionless granular material obtained from natural deposits of sand and gravel, passing 3/4-inch sieve, and not more than fifteen percent (15%) passing the No. 200 sieve.

3) Granular material: Use 100 percent crushed stone or gravel complying with the IDOT "Standard Specifications" gradation No. CA 6.

4) Excavated granular materials: A mixture of sand and gravel, free from organic matter, clay, loam, dirt, and other foreign materi-al, passing the 1½ inch sieve, and not more than fifteen percent (15%) passing the No. 200 sieve.

b) ***Storm Water Services***

All residences having storm water sump pumps shall discharge directly into a storm water service pipe outside of the building. The storm water service pipe shall consist of a six inch (6") PVC SDR26, ASTM D3034 material. Each storm water service pipe shall be shown on the engineering drawings and shall be connected directly to a storm sewer using a pre-manufactured fitting or to a detention basin, where applicable.

c) ***Construction Requirements***

1. Storm sewers shall be constructed in accordance with the "Standard Specifications for Road and Bridge Construction" Illinois Department of Transportation, Standard Specifications for Water and Sewer Main Construction in Illinois, the pipe manufacturer's recommendations, and these Development Standards.

2. ***Excavation and Foundation***

   a. The trench shall be excavated so that the flow line of the finished sewer shall be at the depth and grade shown on the approved plans. The trench for the pipe shall be excavated at least twelve inches (12") wider than the external diameter of the pipe. The width of the trench shall not exceed the external diameter of the pipe by more than eighteen inches (18") at the top of the pipe.

      If the excavation has been deeper than neces-sary, the foundation shall be brought to proper grade by the addition of well-compacted bedding material. Where a firm foundation is not encountered at the grade established, due to soft, spongy or other unsuitable soil (unless other special construction methods are called for on the plans or in the special provisions) all such unsuitable soil under the pipe and for the width of the trench shall be removed and replaced with well-compacted bedding material.

   b. The pipe shall be laid so that it will be uni-formly supported and the entire length of the pipe barrel will have full bearing. No blocking of any kind shall be used to adjust the pipe to grade except when used with embedment concrete. Bedding shall be required for all storm sewer construction, and shall be a minimum thickness equal to one fourth (¼) of the outside diameter of the sewer pipe but shall not be less than four inches (4").

      Note that when PVC pipe is used, the bedding material shall extend to twelve inches (12") over the top of the pipe and shall be compacted to the satisfaction of the inspector.

      Where required by external loading or soil conditions, concrete bedding shall be substitut-ed for granular bedding.

3. ***Pipe Laying***

   a. Pipe shall be laid straight both horizontally and vertically between manholes.

   b. Pipe laying and joining shall be done in accordance with the pipe manufacturer's recom-mendations.

   c. Pipe shall not be dropped from delivery vehicles. All pipe shall be lowered into the trench with a suitable apparatus; in no case shall the pipe be dropped or thrown.

4. ***Backfilling***

a. Backfilling shall not be done until installation of the sewer has been inspected and approved by the Village Inspector.

b. Backfill to four inches (4”) above the top of the pipe, except flexible thermoplastic pipe, shall be done with material conforming to bedding material, placed in six (6) lifts compacted to ninety-five percent (95%) maximum dry density as determined according to ASTM D1557 or AASHTO - T180.

c. Excavations for sewers which are beneath any existing or proposed pavements, driveways and sidewalks and any trenches where the inner edge is within two feet (2’) of such areas shall be backfilled with Special Granular Backfill Mate-rials in twelve inch (12”) lifts compacted to ninety-five percent (95%) maximum dry density as determined according to ASTM D1557 or AASHTO-T180.

d. Excavations for sewers not beneath or within two feet (2’) of existing or proposed paved areas shall be backfilled with material excavated from the trench, unless such material is determined to be unsuitable by the Village Inspector. The material shall be free from clods and rocks and shall be placed in twelve inch (12”) lifts, com-pacting each lift to yield a minimum of eighty-five percent (85%) of maximum dry density as determined according to ASTM D1557 or AASHTO - T180.

5. ***Inspection***

Prior to Village acceptance, all storm sewers shall be cleaned.

6. ***Storm Water Management***

A properly designed storm water management system is required for all developments and shall conform to the Lake County Comprehensive Storm Water Management Plan and the provisions of the Lake County Watershed Development Ordinance and as provided herein. The provisions of the Lake County Watershed Development Ordinance shall be deemed as additional requirements to the minimum Devel-opment Standards and Specifications, the Subdivision Ordinance and all other ordinances of the Village.

7. ***Storm Water Runoff Storage (Detention) Basin Design***

All storm water detention facilities other than roof tops, parking lots and/or underground storage shall be located not less than seventy five feet (75’) from any building or structure to be occupied unless otherwise approved by the Village Engineer.

5.3.5. ***Water Distribution System.***

a) Except as otherwise provided herein, no residential, commercial or industrial subdivision or development including single lots shall be approved unless it is served by water piping connected to the Village water distribution system. Each subdivision or development shall include provisions for a system complete with valves, fire hydrants, and other appurtenances as required herein.

1. Connection to standard water main is required by Village Ordinance 52.07.

2. Before commencing the water distribution system layout, the developer shall confer with the Village Engineer to determine the required size for any water distribution lines transversing the subdivision or lot to fit the Village's available capacities of off-site downstream existing facilities with the estimat-ed increment of flow caused by the subdivision, proposed development and any future off-site devel-opment. Construction required to accommodate said increments shall be submitted as part of engineering plans. Water distribution piping shall be extended to the far edge of the development and at other locations indicated by the Village Engineer.

3. All water distribution system piping shall be extend-ed to the far property line and shall be constructed within public rights-of-way or within approved easements dedicated for public utilities.

4. All attached and detached single family dwelling units shall be served directly by separate water piping connected to the Village's water distribution system and not to be of common service.

The water distribution system shall be designed in accordance with the grading schedule for Municipal Fire Protection, Insurance Services Office recommend-ed fire flows, Illinois E.P.A. Division of Public Water Supply Technical Policy statements and these Development Standards.

a. ***Design***

A complete water distribution system shall be de-signed to serve the entire development. The water mains shall be of adequate size to supply the re-quired domestic and industrial consumption and fire flow demands throughout the system. Water main systems shall be looped to provide continuous flow whenever possible. Dead end mains over one hundred feet (100') in length are prohibited unless approved by the Village Engineer. The design engineer shall submit calculations showing flows in the system at various locations are adequate for domestic consumption and fire flow demand with a required minimum twenty (20) psi residual pressure, at all points of the existing or proposed systems.

b. ***Design Flows-Domestic and Fire Protection***

For purposes of water main design, maximum daily flows shall be based on the following:

Location or Type	Domestic	Fire Flow
Residential Single Family-Detached	100 gpcd	1500 gpm
Single Family-Attached (Townhome) with approved fire wall	100 gpcd	2000 gpm
Multi-Family	100 gpcd	3000 gpm
Office	50 gpcd	3000 gpm
Commercial	60 gal/employee/shift	3000 gpm
Industrial	75 gal/person/shift	3000 gpm

Flow shall be calculated using "C" factor of one hundred (100), ignoring fittings, and with a mini-mum residual pressure of twenty (20) psi, at all points of the existing or proposed systems.

c. ***Pipe Size***

The minimum water main pipe size shall be eight (8) inches in diameter. At all locations in commercial and industrial developments, a minimum diameter of twelve (12) inches is required.

d. ***Fire Hydrants***

1) Hydrants shall be installed at all street intersections and at a maximum spacing of three hundred feet (300') along the lengths of streets with the most remote part of any building no farther than three hundred feet (300') from a hydrant.

2) When a building to be occupied will be set back two hundred fifty feet (250') or more from a street or is located more than three hundred feet (300') from a hydrant, additional hydrants shall be installed such that one (1) hydrant shall be located at the entrance to the build-ing and hydrants shall be provided around the perimeter of the building at maximum two hun-dred fifty feet (250') spacing measured along access roads. Such hydrants shall be installed not more than one hundred twenty feet (120') nor less than forty feet (40') from the building.

3) Fire hydrant spacing plans shall be submitted to the Village Engineer and Enforcement Officer for review and approval by the Fire Protection District for their review and comment.

4) All fire hydrants shall have location flag installed per Fire District standards.

e. ***Valves and Vaults***

1) Valves shall be located on water mains so as to be able to isolate sections of main from the entire system with minimum disruption of ser-vice.

2) Valves shall be installed so that not over eight hundred feet (800') of water main, with services, will be shut off at any time. Valves on water mains servicing single family residen-tial areas shall be installed so that no more than eight hundred feet (800') of water main and/or no more than twenty (20) units shall be affected when shutting off a section of main. Valves shall be installed within Village right-of-way at either end of a water main that is constructed inside rear yard easements.

3) Valves shall be located so that it will to isolate a section of water main.

4) Valve vaults are required on all valves. Valve vaults shall be sixty inch (60") inside diameter for all valves.

5) Manhole shall be centered over valve.

f. ***Thrust Blocks***

Thrust blocks shall be provided at all hydrants, tees and bends. Where undisturbed earth is not available or not likely to be available to support the blocks, tie rods secured to the main water line located between auxiliary valve and water main and retaining glands shall be used as approved by the Village Engineer.

g. ***Depth of Water Mains***

All water mains shall be constructed at a minimum depth of five and one-half feet (5½'), maximum depth of seven feet (7') from final grade to the top of the water main unless otherwise approved by the Village Engineer.

h. ***Separation of Water Mains and Sewers***

Separation and protection of water mains from sew-ers shall comply with the Illinois E.P.A. Division of Public Water Supplies Technical Policy State-ments, latest edition and the Illinois Plumbing Code, latest edition.

i. ***Service Connections***

1) All water service lines shall be designed with a diameter necessary to provide adequate domes-tic or industrial and fire flow use capacity.

2) Water service lines servicing single family residences shall be a minimum of one (1) inch diameter.

b) ***Allowable Materials-Water Main Pipe***

1. All water main pipe shall be ductile iron pipe conforming to AWWA specification C-151 (ANSI A21.51), minimum thickness Class 52.

2. All pipe shall have a minimum nominal laying length of eighteen feet (18').

3. Pipe joints shall be push-on joints or mechani-cal joints conforming to AWWA C-111 (ANSI 21.11).

a. All pipe shall be cement-mortar lined in accor-dance with AWWA C-104 (ANSI A21.4).

b. All ductile iron pipe and appurtances shall be encased in polyethylene in accordance with AWWA C105, latest revision thereof.

c) ***Water Main Fittings***

1. All water main fittings shall be ductile iron fittings conforming to AWWA specifications C-110 (ANSI 21.10).
2. Fittings shall be cement-lined in accordance with AWWA C-104 (ANSI A21.4).
3. Alternate fitting materials may be allowed upon review and approval of the Village Engineer.
4. Tapping Sleeve: Smith Blair Model 665 stainless steel flange or approved equal.

d) ***Valves***

1. Valves shall be ductile iron body, resilient seat type with non-rising stem and O-ring packing conforming to AWWA C-515-01. Valves shall open counter-clockwise with a two inch (2”) square nut.
2. Valves shall be American Control Series 2500-1 ductile iron resilient wedge gate valve.
3. All below grade nuts, bolts & washers will be stainless steel, factory installed.

   Other valves may be allowed upon review and approval of the Village Engineer.

e) ***Valve Vaults***

1. Valve vaults shall consist of precast reinforced concrete sections complying with ASTM C-478.
2. Adjusting rings shall be precast concrete rings. No more than two (2) adjusting rings may be used for a maximum height adjustment of eight inches (8”).
3. Vault steps shall be Neenah R-1981-I or approved equal.
4. Frame and covers for valve vaults shall be Neenah R-1712 or approved equal, embossed "Water" and have recessed pickhole.
5. All valve vaults will be watertight as determined by mandatory vacuum testing.
6. All sampling corporation shall be Ford FB600-4, one inch (1”) or equal as approved.

f) ***Valve Boxes***

1. Valve boxes shall be compatible with size and type of valve protected and have cover marked with the word "WATER".
2. Valve boxes shall extend to finished grade.
3. Valve extensions shall be bituminous coated, carbon steel with two inch (2”) square operating nuts located two inches (2”) below the cover.
4. All valve boxes shall be installed with an adapter including rubber valve box stabilizer, or approved equal.

g) ***Fire Hydrants***

1. Hydrants shall be bagged during installation to protect paint.
2. Hydrants shall be dry barrel type and shall conform to AWWA C-502.
3. Hydrants shall be compression type with (5¼”) minimum size main valve assembly, O-ring seals, (2 ½”) hose nozzles with vented caps, and a (4½”) pumper nozzle with National Standard

threads, a counter-clockwise opening National Standard operating nut, and an above ground break flange.

4. Hydrants shall be provided with a six inch (6”) resilient seat type gate valve with valve boxes and cover marked with the word "WATER".
5. Hydrants shall be painted in red.
6. Hydrants shall be repainted to original manufacturer’s specifications by contractor based on Village specifications if paint is damaged.
7. Hydrants shall be Waterous WB67 250 with sixteen inch (16”) upper standpipe length Meg-a-Lug stainless steel tie rods secured between auxiliary valve and water main.
8. Auxiliary valve will be installed with a twenty-four inch (24”) separation between valve and hydrant.
9. Hydrant to be flagged for location per Fire District specifications.
10. All below grade nuts, washers and bolts shall be stainless steel. Factory installed.

h) ***Service Connections***

1. All water service lines two inches (2”) in diameter or smaller shall be constructed of Type K copper with flared fittings. Service lines four inches (4”) and larger shall be ductile iron conforming to allowable water main material specifications.
2. New ductile iron water main direct tap service connection. Service connection to the water main for services less than two inches (2”) in diameter shall be with a Ford doublestrap brass saddle style 202B and a corporation stop Ford Ballcorp FB1000 with grip joint, or approved equal.

   Service connections to the water main for services four inches (4”) or larger shall be made with a ductile iron fitting conforming to water main fitting specifications where size of main and tap allow, to be determined by Village Engineer. *(Amended per Ordinance No. 1997-0-11)*
3. Each service two inches (2”) or less in diameter shall have a curb stop Ford model B44 ball valve with Minneapolis pattern and grip joints, or approved equal. Services four inches (4”) and larger shall have gate valves conforming to water main gate valve specifications and a curb box Ford Minneapolis pattern with a one and one-half inch (1½”) upper section and type PXL lid (to include brass plug).

i) ***Granular Pipe Bedding and Trench Backfill***

1. Well graded, washed, mixture of gravel or crushed stone aggregate free of clay, loam, dirt, calcareous or other foreign matter conforming to the IDOT "Standard Specifications" gradation No. CA11, or the Standard Specifications for Water and Sewer Construction in Illinois granular cradle Type B, with the following gradation:

Sieve Size	Percent Passing
1-inch	100%
3/4-inch	84-100%
1/2-inch	30-60%
No. 4	0-12%
No. 16	0-6%

j) ***Special Granular Backfill Materials***

1. Provide either sand, pit run gravel, granular material, or excavated granular materials.

a. Sand: Well graded, free from organic matter, cohesionless, complying with the IDOT Standard Specification gradation No. FA6.

b. Pit run gravel: Free from organic matter, cohesionless granular material obtained from natural deposits of sand and gravel, passing 3/4” sieve, and not more than fifteen percent (15%) passing the No. 200 sieve.

c. Granular material: Use 100 percent crushed stone or gravel complying with the IDOT "Standard Specifications" gradation No. CA6.

d. Excavated granular materials: A mixture of sand and gravel, free from organic matter, clay, loam, dirt, and other foreign material, passing the 1 ½” sieve, and not more than fifteen percent (15%) passing the No. 200 sieve.

k) ***Construction***

1. ***Water Mains***

Water mains and appurtenances shall be installed in conformance with AWWA C-600, the material manufacturer's recommendations, the standard specifications for Water and Sewer Main Construction in Illinois and these Development Standards.

2. ***Backfilling***

a. Backfilling shall not be done until installation of the sewer has been inspected and approved by the Village Inspector.

b. Backfill to four inches (4”) above the top of the pipe shall be done with material conforming to bedding material placed in six inch (6”) lifts compacted to ninety-five percent (95%) maximum dry density as determined according to ASTM D1557 or AASHTO-T18O.

c. Excavations for water which are beneath any existing or proposed pavements, driveways and sidewalks and any trenches where the inner edge is within two feet (2’) of such areas shall be backfilled with special Granular Backfill Materials in twelve inch (12”) lifts compacted to ninety-five percent (95%) maximum dry density as determined according to ASTM D1557 or AASHTO-T18O.

d. Excavations for water not beneath or within two feet (2’) of existing or proposed paved areas shall be backfilled with material excavated from the trench, unless such material is determined to be unsuitable by the Village Inspector. The material shall be free from clods and rocks and shall be placed in twelve inch (12”) lifts, compacting each lift to yield a minimum of eight-five percent (85%) of maximum dry density as determined accordingly to ASTM D1557 or AASHTO-T180.

3. ***Water System Connections***

All connections to the existing water system shall be made under full water service pressure unless otherwise approved by the Enforcement Officer.

4. ***Fire Hydrants***

a. Fire hydrants shall have a minimum of one (1) cubic yard of one quarter inch (¼”) to three quarters inch (¾”) of washed river stone placed at the base of the hydrant to provide drainage at the barrel.

b. Auxiliary valves shall be connected to hy-drants. The minimum distance between auxiliary valve and hydrant shall be thirty inches (30”).

c. The center of the hydrant's pumper nozzle shall be not less than twenty-four inches (24”) nor more than thirty inches (30”) above finished ground elevation. Hydrants in street rights

-of-way shall be placed not less than three feet (3') nor more than eight feet (8') from the back of curb. Hydrants shall be a minimum of forty-eight inches (48") from any tree, pole or other obstruction.

5. ***Miscellaneous***

   a. Water service lines shall have a minimum cover of five and one-half feet (5 ½') with a maximum of seven feet (7').

   b. Curb stops and curb boxes shall be located in public rights-of-way. Such curb stops and boxes shall not be located less than three feet (3') from paved areas unless approved by the Enforcement Officer.

   c. Water meters per Village standards

l) ***Testing***

1. As part of the construction of development improvement, all water mains shall be tested as described in this Section. The Public Works Department and Village Engineer shall be notified of the time of the test a minimum of twenty-four (24) hours prior to the test. All tests shall be performed in the presence of the Village Inspector.

2. All new water mains and service lines shall be subjected to a hydrostatic pressure of not less than one hundred fifty (150) pounds per square inch. Hold the test pressure for duration of two hours without pressure loss or further pressure application. Before applying the specified test pressure, all air shall be expelled from the pipe. All leaks shall be repaired until tight. Any cracked or defective pipes, fittings, valves, or hydrants discovered in consequence of this pressure test shall be removed and replaced and the test repeated until satisfactory results are obtained.

3. A metered leakage test shall be conducted after the pressure test has been satisfactorily completed. Duration of each leakage test shall be at least twenty-four (24) hours.

   During the test, water lines shall be subjected to the normal water pressure of the Village water system. Maximum allowable leakage shall be in accordance with the applicable provisions of the standard specifications for water and sewer main construction in the State of Illinois as recorded by a meter approved by the Village Public Works Department.

   Should any test of pipe disclose leakage greater than the maximum allowable amount, the defective joint or joints shall be located and repaired and the twenty-four (24) hour metered leakage test repeated until the leakage is within the specified allowance.

m) ***Preliminary Flushing***

Prior to chlorination, the main shall be flushed as thoroughly as possible with the water pressure and outlets available. All valves will be operated by Village personnel. Flushing shall be done after the pressure test is made. It shall be understood that such flushing removes only the lighter solids and cannot be relied upon to remove heavy material allowed to get into the main during laying. Hydrants shall be installed at the end of the main and shall be flowed at two and one-half feet (2½') minimum per second for at least five (5) minutes per Five-Hundred (500) linear feet or longer until the water runs clear.

n) ***Disinfection***

1. The Village Water Department and Village Engineer must be notified forty-eight (48) hours prior to any testing. The preferred point of application of the chlorinating agent shall be at the beginning of the pipe line extension of any valved section of it and through corporation stop in the top of the newly laid pipe.

2. After all mains have been satisfactorily tested, the contractor shall disinfect the main in accordance with AWWA Standard C-651. A chlorine concentration during disinfection shall be maintained at a minimum fifty (50) mg/1 available chlorine. The chlorinated water shall be retained in the main for a period of at least twenty-four (24) hours. At the end of the twenty-four (24) hour period, the treated water shall contain no less than twenty-five (25) mg/1 chlorine throughout the main. Village designee will be on site.

3. After the disinfection period, the water shall be flushed from the main until the chlorine concentration in the water leaving the main is no higher than that generally prevailing in the system or less than one (1) mg/1. After flushing, the contractor shall take a minimum of two (2) samples to be bacteriologically tested to show zero (0) colonies and the absence of coliform organisms. The number of samples may be increased as determined by the inspector. A second series of samples shall be collected no less than twenty-four (24) hours after the first set of samples has been collected. The individual sets of samples shall be bacteriologically tested by an independent laboratory approved by the State. Village designee shall deliver the sample(s) to the lab.

4. If either, or both sets, of samples do not pass the bacteriological examination, the contraction shall re-disinfect the main in accordance with the procedures until such time that satisfactory samples are collected.

5. The Village will provide the water for initial flushing and testing only. The Village shall be compensated for water used in subsequent flushing and testing.

o) ***Water Main Protection***

1. Wherever water mains cross storm sewers, sanitary sewer, or sewer service connections:

   a. Lay the water mains so that its invert is at least eighteen inches (18”) above the top of the sewer.

   b. Maintain this vertical separation for that portion of the water main located within ten feet (10’) horizontally of any sewer or drain crossed.

   c. Center a length of water main pipe over the sewer to be crossed with joints equidistant from the sewer or drain.

2. When it is impossible to obtain the minimum eighteen inches (18”) inches vertical separation, or when it is necessary for the water main to pass under a sewer or drain:

   a. Construct the sewer or drain of pressure pipe, conforming to the specification for water main materials.

   b. Extend the sewer construction on each side of the crossing until the normal distance from the water main to the sewer or drain is at least ten feet (10’).

   c. As an alternate, install either the water main or sewer inside a water main quality casing or carrier pipe for a distance of ten feet (10’) measured perpendicular to the sewer on each side of the crossing.

3. Where a water main must cross under a sewer:

   a. Maintain a vertical separation of minimum eighteen inches (18”) between the invert of the sewer and the crown of the water main.

   b. Support the sewer or drain line to prevent settling and breaking either pipe.

p) ***Water Service Line Protection***

1. Comply with the requirements of water main separation.

2. Do not install water lines through sewer manholes.

5.3.6. ***Street Lighting Improvements.***

All development shall include the design and construction of street lighting facilities for the illumination of all roadways, public or private, which lie in or border the development and all parking lots within the development. Street lighting to be accepted by the Village shall be constructed within the public right-of-way or in easements dedicated to the Village or as otherwise approved by the Village Board.

1. ***Specifications***

   Street lights and appurtenances shall be designed and installed according to The American Standard Practice for Roadway Lighting, current edition; The National Electric Code, current edition; and these Development Standards and all other applicable codes and ordinances of the Village.

2. ***Street Light Locations***

   a. ***Residential, Commercial and Industrial Districts***

   Poles shall be located at all intersections and spaced at a distance not exceeding three hundred feet (300') from one another for midblock locations alternating on both sides of the roadway. Poles shall also be located at the ends of cul-de-sacs and at curves in the roadway as required by the Village Engineer. Poles shall be set in the parkway two feet (2') from the back of curb. Where the distance between the sidewalk and the curb is such that this location is impractical or where the sidewalk is adjacent to the curb, the Village Engineer shall review and approve any alternate locations for the pole.

   Unless otherwise directed by the Village Engineer, the direction of the support arm shall be at right angles to the centerlines of the intersecting streets at a four (4) legged intersection. At "T" intersections, a pole shall be provided on the centerline extended of the terminating street at the top of the "T" with the support arm extending toward the center of the intersection. Between intersections, mast arms shall be orientated at right angles to the centerline. In cul-de-sacs, lights shall be placed in the center median or if no center median is to be constructed, at the end of the cul-de-sac along the centerline extended.

   b. ***Arterial Streets***

   Poles shall be located at intersections and at other locations such that the illumination meets the following criteria:

   1) Maintain 1.2 average foot candles (after depreciation)

   2) Maximum/minimum ratio 6.0: 1.0

   3) Average/minimum ratio 3.0:1.0

   c. ***Light Pole, Luminaire, Lamp and Wire/Cable Requirements***

   1) Light poles, luminaires, lamps, and wire/cable shall be in accordance with Commonwealth Edison standard specifications or as approved by the Director of Public Works and the Village Engineer.

   2) A map must be provided that denotes the location of the power source for each lamp and the wattage of each light.

5.3.7. ***Public Utilities.***

a) All utility lines for telephone and electric service shall be placed in rear-line easements when carried on overhead poles.

b) Where telephone and electric service lines are placed under ground entirely throughout a subdivided area, said conduits or cables shall be placed within easements or dedicated public ways in a manner which will not conflict with other underground services. Further, all transformer boxes shall be located so as not to be unsightly or hazardous to the public.

c) Outdoor warning systems may be required based on the geographic location of the development's existing outdoor warning systems.

5.3.8. ***Landscaping.***

Any development or subdivision subject to the requirements of the Development Standards and Specifications shall provide landscaping within the development and on public rights-of-way adjacent to or within such development. Landscaping required by these Development Standards and Specifications shall be a condition to the issuance of a final Certificate of Occupancy for any improvements built on the subject property.

1. ***Subdivision Street Landscaping*** *(Amended per Ordinance No. 1995-0-22)*

   a. Parkway trees are required in all residential subdivisions where overhead lines do exist, only trees from the small tree list shall be planted (Section A.2. Table I). Such trees shall be planted in the parkways not less than four feet (4') from any sidewalk or curb, except as otherwise provided below, and shall be in number equal to the equivalent of one (1) tree per fifty feet (50') of street frontage and may be spaced not less than twenty-five feet (25') apart, provided that at street corners trees shall be located not less than twenty-five feet (25') from the intersection of street right-of-way lines. No greater that eight (8) trees of the same genus may be planted adjacent to each other, In no case shall there be less than one (1) parkway tree per lot, except that there shall be not less than two (2) parkway trees on corner lots, (one (1) tree on each frontage).

   b. Location of the trees in cul-de-sacs: The drip line should not extend beyond the back of the curb for a height above fifteen feet (15').

   c. In all business and industrial districts subdivisions, parkway trees shall be provided equal to the equivalent of one (1) tree per sixty feet (60') of street frontage and shall be spaced not more than one hundred fifty (150) feet apart.

   d. The following plant forms are prohibited in sewers or drains of the Village:

      <u>Prohibited Plant Forms</u>

      1) Multiple Stem Forms - those forms containing more than one (1) stem.

      2) Espaliers or Topiary - forms achieved through trimming or pruning which are distorted or contrary to the natural shape of the species.

      3) Flowering Shrubs - those shrubs which typically grow taller than three feet (3').

      4) Topped or Dehorned Trees - trees with most or all of the crown removed.

   e. <u>Permitted Tree Species:</u>

      The following Tables contain listings of the only tree species acceptable and approved for planting on Village parkways. The size of the tree (large, medium and small) shall be determined by the Building Commissioner.

TABLE I

LARGE TREES

SCIENTIFIC NAME	COMMON NAME
Acer saccharum	Sugar Maple
Acer platanoides	Norway Maple
Betula nigra	River Birch
Celtis occidentalis	Hackberry
Celtis laevigata	Sugar Hackberry
Ginkgo biloba	Ginkgo (male)
Gleditsia triacanthos	HoneyLocust (thornless)
Gymnocladus dioicus	Kentucky Coffee Tree (male)
Liquidamber styraciflua	Sweetgum
Lirlodendron tulipifera	Tulip Tree
Platanus acerifolia	London Plane Tree
Phellodendron amurense	Amur Cork Tree
Pyrus calleryana	Callery Pear
Quercus alba	White Oak
Quercus bicolor	Swamp White Oak
Quercus imbricaria	Shingle Oak
Quercus macrocarpa	Bur Oak
Quercus muehlenbergii	Chinquapin Oak
Tilia americana	Large Leaf Linden
Tilia heterophylla	White Basswood
Tilia cordata	Little Leaf Linden
Tilia euchlora	Crimean Linden
Tilia tomentosa	Silver Linden
Acer x freemani	Autumn Blaze Maple

SMALL TREES

SCIENTIFIC NAME	COMMON NAME
Acer campestre	Hedge Maple
Acer ginnala	Amur Maple
Acer tartaricum	Tartarian Maple
Amalanchier grandiflora	Apple Serviceberry (Tree Form)
Amalanchier laevis	Allegany Serviceberry (Tree Form)
Alnus glutinosa	Black Alder
Carpinus betulus	European Hornbeam
Carpinus caroliniana	American Hornbeam
Cercidiphyllum japonicum	Katsura
Crataegus sp.	Hawthorne(Thornless & Disease Resistant)
Malus sp.	Flowering Crab
Ostrya virginiana	Ironwood
Zelkova serrata	Japanese Zelkova

f. Parkway trees shall be balled and burlapped and shall have a minimum trunk diameter of two and one-half inches (2½") (measured at six inches (6") above the ground level) and shall be of specimen quality as established by the American Nursery Association. They shall be northern grown and reflect the approved species as listed in Table I. If required, all trees shall be tagged and identified as to species (scientific and common name), size and place of origin. Circular metal tags shall be used and numbering approved by Village Arborist. All tree information shall be submitted in GIS format, to be compatible with Village of Wauconda's GIS data. Such tags shall not be removed by the developer prior to inspection by the Director of Public Works, or his designee.

g. Wire baskets, burlap and twine shall be removed from the top eighteen inches (18") of the tree ball. Treated burlap shall be completely removed. Burlap, wire baskets, and twine removed from the tree ball shall be removed from the site.

h. All trees (original or replacement) determined by the Building Commissioner, or his designee, not to be in vigorous growing condition after one (1) growing season shall be replaced at the beginning of the next succeeding planting season, at no cost to the Village of Wauconda.

2. ***Areas to be Graded and Sodded***

a. All unpaved areas within the dedicated right-of-way shall be graded and sodded or seeded in an approved manner. Restoration work shall be performed to the satisfaction of the Village Engineer.

b. All parkways shall be graded smooth and topped with at least four inches (4") of topsoil after compacting and removal of stumps, trees that cannot be saved, boulders and such. Topsoil shall be of a sandy clay loam friable soil free of rocks, vegetation, or other debris.

c. Upon recommendation of the Village Engineer, the Village Board may require sodding of an area to prevent soil erosion and blockage of drainage system.

Seeding and sodding shall be in accordance with Standard Specifications for Road and Bridge Construction, Illinois Department of Transportation, latest edition.

3. ***Private Property Landscaping***

a. ***Protection of Existing Trees***

Trees and surface vegetation provide a natural means of sedimentation and erosion control, as well as adding an aesthetic feature to the local landscape.

b. ***Existing Tree Plan***

1) When determining the location of improvements within a subdivision or development and the location of buildings or structures on lots, the developer shall make every reasonable effort to save healthy trees having a diameter of four inches (4") or greater (measured at six inches (6") above ground level.)

2) Nothing in this Section shall be interpreted to require the developer to develop his property at a lesser density or intensity than allowed by the Zoning Ordinance or elsewhere in these Development Standards and Specifications.

3) The developer shall submit an existing tree plan certifying the location, size and species using botanic and common names of all healthy trees having a diameter of four inches (4") or greater (measured at six inches (6") above the ground level) for areas within fifty feet (50') of any proposed improvement. For remaining areas covered by the preliminary plan only the general locations of the trees is required. The developer shall

indicate on such plan which trees he proposes to save in accordance with this Section. The trees to be saved in accordance with this Section shall be agreed upon as part of the preliminary plan approval.

In addition, the developer shall submit:

a. A proposed grading plan for the site indicating the location, size and species using botanic and common names of the trees to be saved.

b. A plan establishing the methods to be used for preserving the trees that are to be saved. Such plan shall include the following provisions:

   1) All grading and construction equipment shall be forbidden from encroaching within the tree's drip line;

   2) Crushed limestone or other materials detrimental to the tree shall not be dumped within the tree's drip line or at any higher location where drainage toward the tree could affect the health of the tree; and

   3) Installation of snow fencing at the periphery of the tree's drip line shall be required.

c. The developer's proposed methodology for saving existing trees shall be reviewed by the Plan Commission or Director of Building, Zoning and Economic Development. If, in the opinion of the reviewer, the developer has not taken the necessary precautions in preserving such existing trees, a land development permit will not be issued until such time as the developer satisfactorily amends his plans for the preservation of such existing trees. If the developer and the reviewer cannot agree on a satisfactory plan, the developer can appeal the decision to the Village Board.

   In the event that a tree designated on the approved existing tree plan for saving such healthy trees shall be destroyed or razed by the developer during the construction process, the developer shall replace such tree with a tree of approved species and having a combined total diameter not less than the tree or trees so destroyed or razed provided the replacement tree or trees shall not be less than 2.5 inches in caliper. Cost of replacement shall be equal to the amount stated in the “Landscapes Tree Evaluation Guides”. There will be a fine per loss of Heritage trees that are not part of an approved plan.

4. ***Installation of Fences***

   a. ***Residential Developments***

   If the development is designed in such a manner that the rear lot property is parallel and adjacent to a street or road, the developers shall install six foot (6”) high board on board fence along the rear lot line for all lots whose rear property lot line is parallel and adjacent to the street or road.

   The fence described herein shall be considered common property of the homeowners of the subdivision and, such as, shall be maintained by the Homeowner’s Association at their expense.

   b. ***Industrial Developments***

   If the development is designed in such a manner that the rear lot property line is parallel and adjacent to a street or road, the developers shall install a six foot (6’) high board fence along the rear lot line for all lots whose rear property line is parallel and adjacent to the street or road.

5.3.9. ***Benchmarks and Monuments.***

a) ***Benchmarks***

Benchmarks shall be placed at every quarter (¼) mile interval in the north-south and east-west directions.

1. A minimum of one such benchmark shall be set in each subdivision and resubdivision.
2. The benchmark shall be of concrete, not less than six inches (6") in diameter and sixty inches (60") in depth with a center #4 vertical steel reinforcing rod cast in place.
3. A brass disc shall be cast in place on top of each such bench mark.
4. The developer shall provide the Village Engineer with the documented U.S.G.S. elevation of each such bench mark.
5. Each benchmark shall be set flush with the finished grade.
6. Benchmark must be adhered to a fixed, permanent object or structure.

b) ***Monuments***

Steel pipe not less than one inch (1") in diameter shall be set at all block corners, block angle points and points of curvature. Iron pipes not less than one inch (1") in diameter or steel rods not less than one-half inch (½") in diameter shall be set on all other lot corners and lot angle points. All iron pipes and steel rods shall be not less than twenty-four (24) inches in length.

c) ***Monument Verification***

The developer shall expose and verify the existence of all required steel rods after the completion of all construction and prior to final acceptance by the Village Board. The developer shall replace in kind any steel rods found to be missing.

5.3.10. ***Repair and/or Replacement of Utilities Upon Resubdivision.***

Prior to approval for resubdivision, the developer shall arrange with the Enforcement Officer for an inspection of all existing utilities including, but not limited to sanitary and storm sewers, water mains and all related appurtenances, and street lights and shall include any required fees for such inspections.

These utilities shall meet or exceed the standards as stated in these Development Standards for the existing and/or proposed extension of utility needs on site as well as off site.

5.3.11. ***Maintenance of Required Utilities.***

Prior to Village acceptance all utilities including, but not limited to sanitary and storm sewers, water mains and appurtenances, streets and street lights, shall be maintained in good repair and working order so that they function safely and effectively without threat to health and safety.

Any repairs shall be made by and at the expense of the owner of the property. The Village may, in case of an emergency, repair any defect and if this is done the cost of such repair work shall be repaid to the Village by the owner of the property.

6.0. ***Construction Improvement Approval/Village Approval of Completed Improvements.***

6.1. ***Preconstruction Meeting.***

Prior to commencing the construction and installation of any improvement contemplated herein to be con-structed or installed, the Developer's contractors shall meet with the Village Engineer, Director of Building, Zoning and Economic Development and the Director of Public Works at the

Village Hall to review the inspection methods and procedures outlined herein for each construction and installation.

6.2. ***Construction Inspection Procedures.***

a) ***Inspections***

All improvements constructed under the terms of the Development Standards and Specifications shall be subject to inspections by the Enforcement Officer or the duly authorized representative.

Compensation for such inspections and other costs incurred in connection with such inspection shall be paid by the subdivider or developer to the Village.

The applicant shall give not less than forty-eight (48) hours notification to the Enforcement Officer prior to the performance of any of the following work:

1. The construction of any roadway or street.
2. The surfacing of any roadway or street.
3. The installation of any curbing or gutters.
4. The construction of any sidewalks.
5. The grading or backfilling of any open trench or excavation in which any utility facilities, including but not limited to, water lines, sewer lines, and electrical cables have been installed.
6. The construction of any driveways.
7. The construction of any parking lot.

b) ***Procedures***

After the forty-eight (48) hour notice period specified above, the Enforcement Officer may conduct an on-site inspection to determine that the work complies with the engineering drawings.

1. If, in the opinion of the Inspector, such work does not comply with the final drawings, he shall have the authority to order that all such work shall be terminated until such time as necessary steps are taken by the developer to correct any defects or deficiencies.
2. After the required corrections have been completed, the applicant shall again notify the Village Engineer and/or Building Department as provided above in this Section.

6.3. ***Final Inspection Procedures.***

Upon completion of all improvements within the area covered by the preliminary and final subdivision plat or development plan, the applicant shall notify and Village Engineer and/or Building and Zoning Department in writing, who shall thereupon authorize a final inspection of all improvements so installed.

a) The applicant shall prepare two (2) sets of blueline prints and one (1) electronic file, AutoCAD format as-built record drawings, reduced to an overall size of eleven inches by seventeen inches (11”x17”). One set of blueline drawings shall be submitted to the Village Engineer and one set of blueline print and one set of electronic files, Autocad format shall be submitted to the Director of Building, Zoning and Economic Development. Record drawings shall show the location of all water mains, storm sewers, sanitary sewers, roadways, street lights, sidewalks, valves, rim and invert elevations of all manholes, catch basins, inlets, sanitary manholes, length and grade of pipe, service pipe locations, as-installed material specifications, as-built grading of drainage swales, overland flow routes, detention basins, and top of foundation elevations. The

record drawings shall accompany any request for final inspection of improvements. Village Water System, Sanitary Sewer System and Storm Water Collection system will be numbered per Village specifications. The Village shall not release any remaining security on deposit or filed with the Village until and unless the as-built record drawings are provided to the Village and the Village has approved of the form and content of those drawings.

b) If such final inspection indicates that there are any defects or deficiencies in any such improvement as installed, or if there are any deviations in such improvements, as installed, from the final engineering drawings; which defects will, in the opinion of the Village Engineer adversely affect the performance, suitability, or desirability of said improvements, the Village Engineer shall notify the applicant in writing of such defects, deficiencies, or deviations and the applicant shall, at his sole cost and expense, correct such defects or deviations within two (2) months of the date of notification.

c) When such defects, deficiencies or deviations have been corrected, the applicant shall notify the Village Engineer in writing that the improvements are ready for final inspection.

6.4. ***Acceptance of Improvements by Village.***

a) Upon receipt of notification by the Village Engineer that a public improvement has been installed substantially in conformity with approved plans and specifications, the Village Board shall adopt a motion formally accepting said public improvement.

b) In the event said public improvement is to be dedicated to the Village, the motion shall formally accept said public improvement, at which time it shall become the property of the Village.

c) All such public improvements shall remain the property of the developer who shall have full and complete obligation for repair and maintenance thereof, until the adoption of such motion by the Village Board formally accepting said public improvement. No action of a board, commission, group, officer, agent, or employee of the Village or approval of any plat or plan shall imply acceptance of public improvements until the adoption by the Village Board.

d) Notwithstanding the above, the applicant shall fully guarantee such public improvements for three (3) years after acceptance by the Village Board. Such guarantee shall be in the amount of ten (10) percent of the cost of the improvements and in the form of an irrevocable letter of credit or a bond executed by a surety company acceptable to the Village.

e) Developer must include a Bill of Sale that denotes all improvements per Village specifications.

LIST OF ILLUSTRATIONS

The illustration section is included as part of the adopted development standards and specifications:

ILLUSTRATIONS PAGE

Symbol Library 71-72
Water Valve Vault Detail 73
Pressure Connection Valve Vault Detail 74
Fire Hydrant Installation Details 75
Fire Hydrant Connection Details (4) 76-79
Watermain Stream Crossing Detail 80
Watermain Thrust Blocking Details 81
Water Service Connection 82
Sanitary Sewer Manhole 83
Sanitary Sewer Service Connection Detail 84
Sanitary Sewer Service Riser Detail 85
Storm Sewer Manhole - Type A 86
Storm Sewer Catch Basin - Type A 87
Storm Sewer Catch Basin - Type B 88
Storm Sewer Catch Basin - Type C 89
Storm Sewer Inlet - Type A 90
Storm Sewer Inlet - Type B 91
Soil Erosion Control Triangular Silt Dike 92
Sediment Barrier 93
Ditch Check 94
Silt Fence 95
Street X-Section Arterial 96
Street X-Section Collector/Industrial 97
Street X-Section Minor/Cul-de-Sac 98
Curb X-Section Barrier 99
Curb X-Section Roll 100
Driveway Pavement Detail Residential 101
Driveway Pavement Detail Commercial/Industrial 102
Sidewalk Ramp (2) 103-104
Trench Details Pavement Restoration 105
Street Light Detail 106

Village of Wauconda Construction and Asbuilt Drawing Symbol Library

TREES AMD BUSHES

Description: Tree, deciduous
File Name: TR (Maple, Oak, etc.)

Description: Tree, conifer
File Name: PN1 (Pine, fur, etc.)

Description: Tree Stump
File Name: STUMP

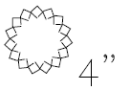

Description: Bush/Shrub
File Name: BSHD (Deciduous)

Description: Bush/Shrub
File Name: BSHC (Conifer)

EXISTING TOPOGRAPHIC SYMBOLS

Description: Sign
File Name: SIGN

Description: Post (1/16” Circle)
File Name: POST

Description: M
File Name: PN1 (Pine, fur, etc.)
ailbox

Description: Flagpole
File Name: FP

MISCELLANEOUS

Description: Boring Location
File Name: TARGET

Description: Caution Marker
File Name: CAUTION

UTILITIES

Description: Gas Valve
File Name: UGV

Description: Gas Manhole
File Name: UGMH

Description: Gas Vent
File Name: UGVNT

Description: Electric Box
File Name: UEBX

Description: Electric Manhole
File Name: UEMH

Description: Telephone Box
File Name: UTBX

Description: Telephone Manhole
File Name: UTMH

Description: Cable TV Box
File Name: UCBX

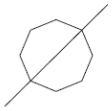

Description: Utility Pole
File Name: UP

Description: Light Pole
File Name: LP

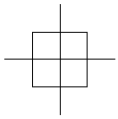

Description: Traffic Signal Light
File Name: TRFSIG

Description: Pull Box
File Name: UPB

Village of Wauconda Construction and Asbuilt Drawing Symbol Library

SANITARY SEWER

Description: Sanitary Manhole
File Name: SMH/SPMH

CO

Description: Sanitary Cleanout
File Name: SCO

Description: Flow Arrow
File Name: UFLARO/SPFLARO

Description: Sanitary Lateral Riser
File Name: SPRSR

Description: Sanitary Lateral Wye
File Name: SPLATY

STORM SEWER

Description: Storm Manhole
File Name: QMH/QPMH

Description: Storm Catch Basin
File Name: QCB/QPCB

24" CMP

Description: Storm Culvert Pipe
File Name: LSP:CULV

SURVEY POINTS

Description: Section Corner
File Name: SECCOR

Description: Bench Mark
File Name: BM

Description: Monument
File Name: MON

Description: Iron Pipe found
File Name: IP

900.00 900.00

Description: Spot elevation
File Name: ELTAG

WATER MAIN

Description: Water Valve
File Name: WMV/WMPV

Description: Curb Stop Box
File Name: WMCORP

W

Description: Valve Manhole
File Name: WMMH/WMPMH

Description: Hydrant
File Name: WMHYD/WMPHYD

Description: Yard Hydrant
File Name: WMYH/WMPYH

Description: Reducer
File Name: WMPR

Description: Plug
File Name: WMPP

Description: Plug With Air Release
File Name: WMPAR

Description: Cross
File Name: WMPC

Description: Tee
File Name: WMPT

Description: 90° Bend
File Name: WMP90

Description: 45° Bend
File Name: WMP45

Description: 22-1/2° Bend
File Name: WMP22

Description: 11-°1/4° Bend
File Name: WMP11

Description: Vertical Offset
File Name: WMPVO

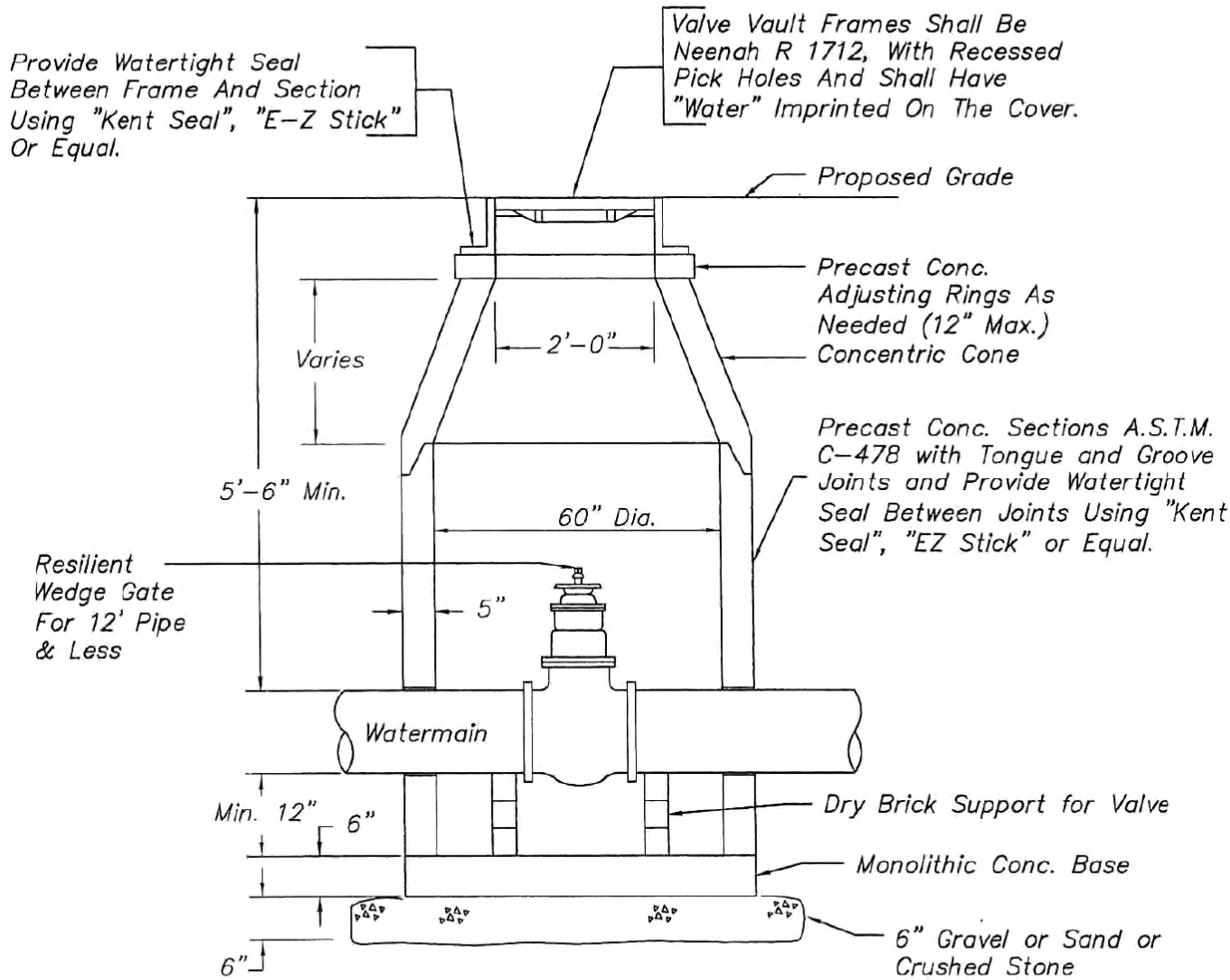

NOTE:
- Pipe Openings Cast Into Wall
- Valve Centered Under Opening
- Manhole Steps – 16" C-C
  Co Polymer Plastic With
  Continuous ½" Steel Reinforcing
- Pipe Connections Fitted with
  Watertight "Boots"

TYPICAL VALVE VAULT

Not to Scale

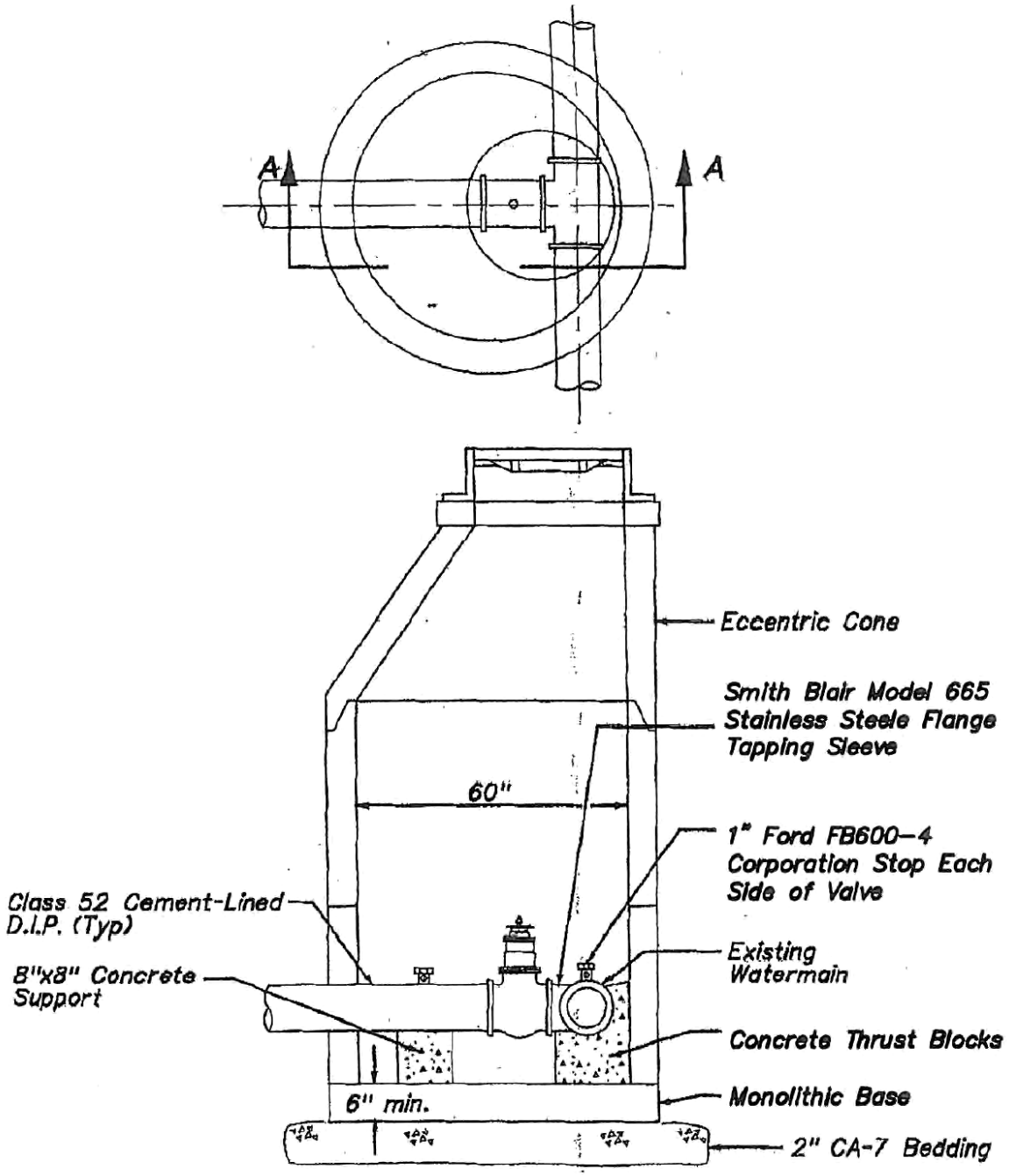

Section A-A

- Frame & Rings(s) to be set in a bed of mortar or sealed with a bitumen seal (E-Z Stick or approved equal).
- Adjusting ring height not to exceed 8".
- C.I. Manhole frame and cover similar to Neenah No. 1712, or equal with standard duty, non-rocking type lids with "WATER" cast into place to be provided.
- Standard valve vault specifications require concentric cones (see separate detail).
- **Pipe Connections Fitted with Watertight "Boots"**

WATERMAIN PRESSURE CONNECTION

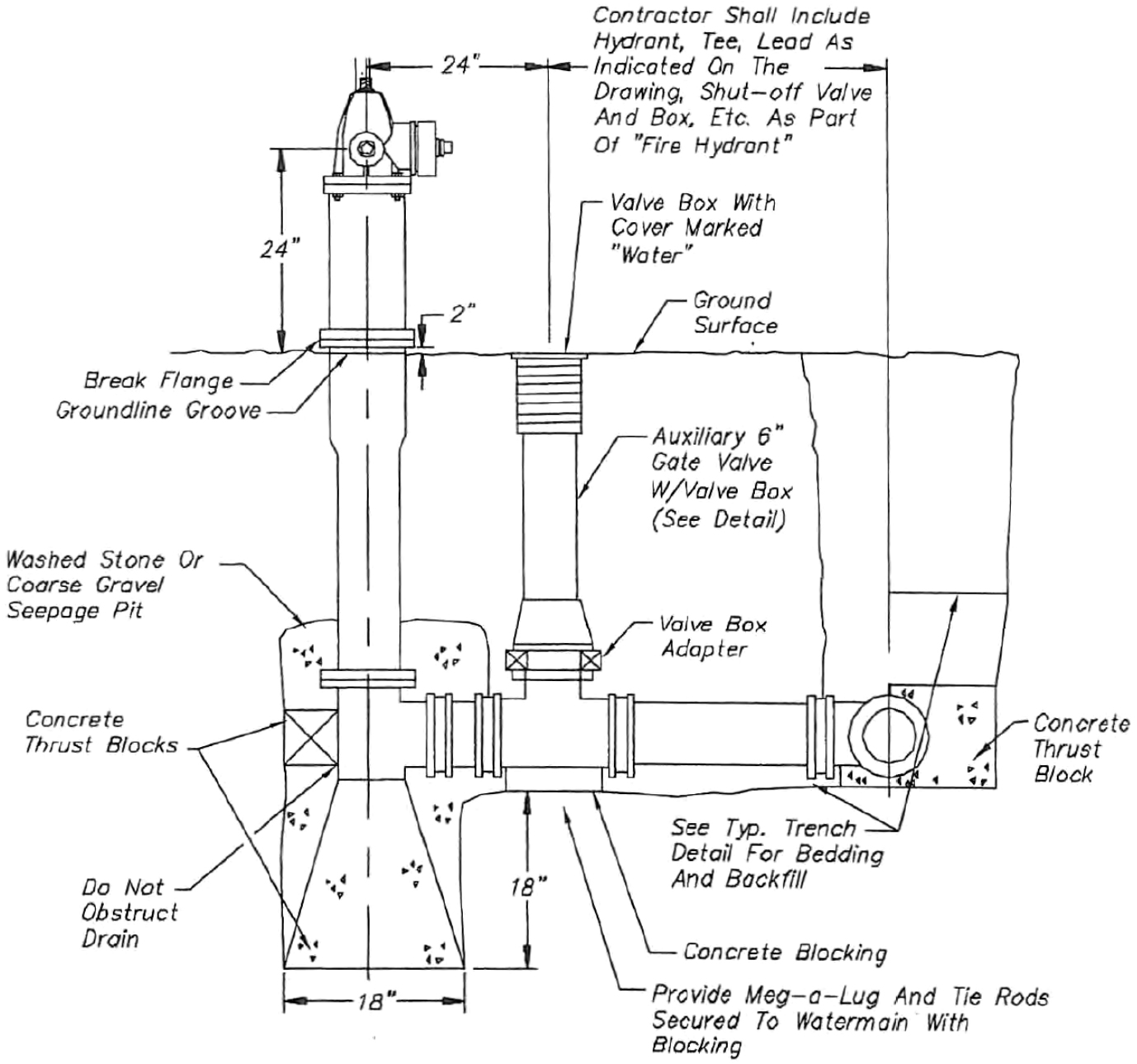

NOTE:
-Hydrant Painted Red
-Hydrant To Be Flagged Per Village Spec
-Protect Hydrant Paint During Backfill

TYPICAL FIRE HYDRANT DETAIL

Not To Scale

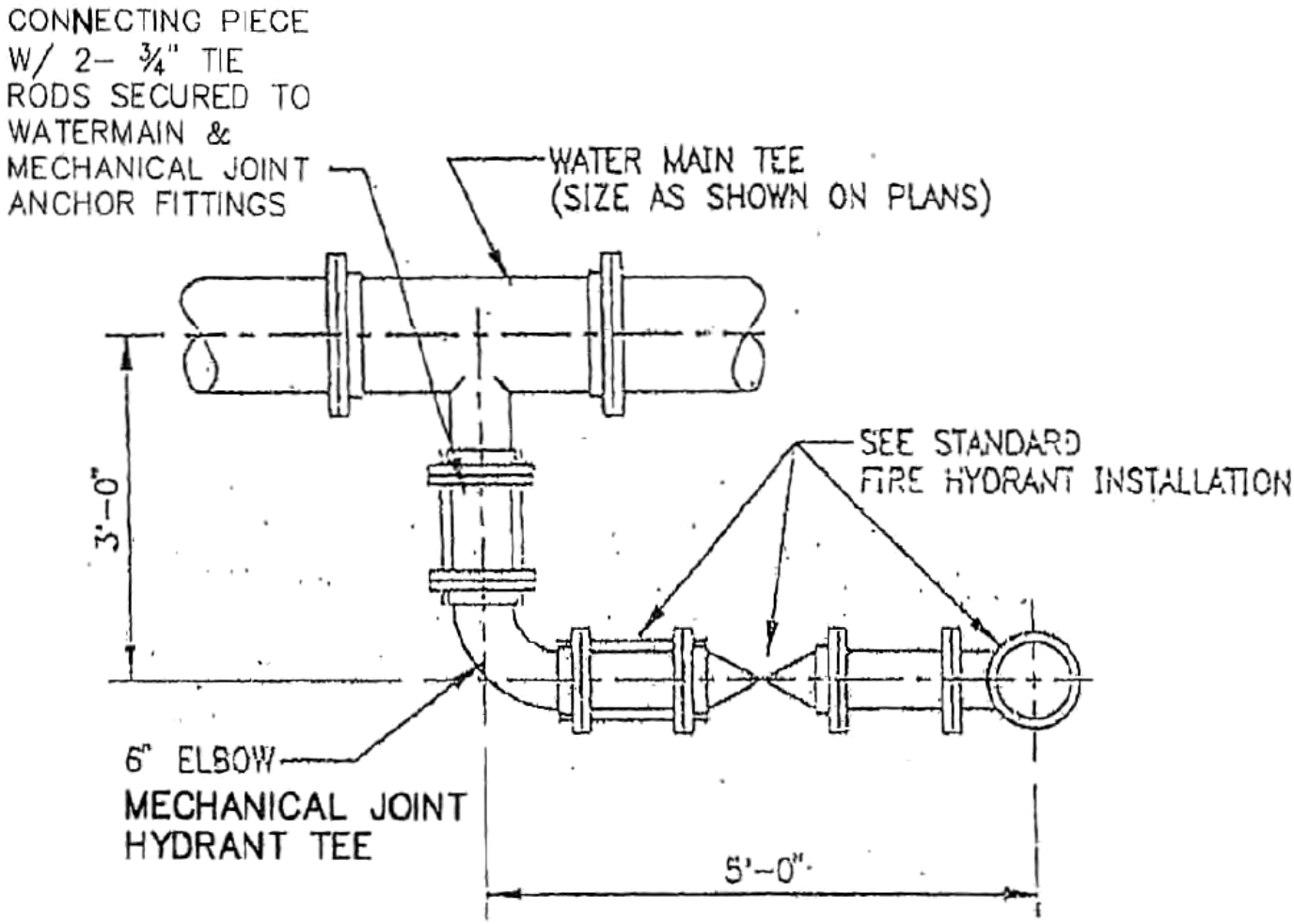

FIRE HYDRANT – 90° CONNECTION

FOR WATERMAIN SIZES GREATER THAN 6"

Not to Scale

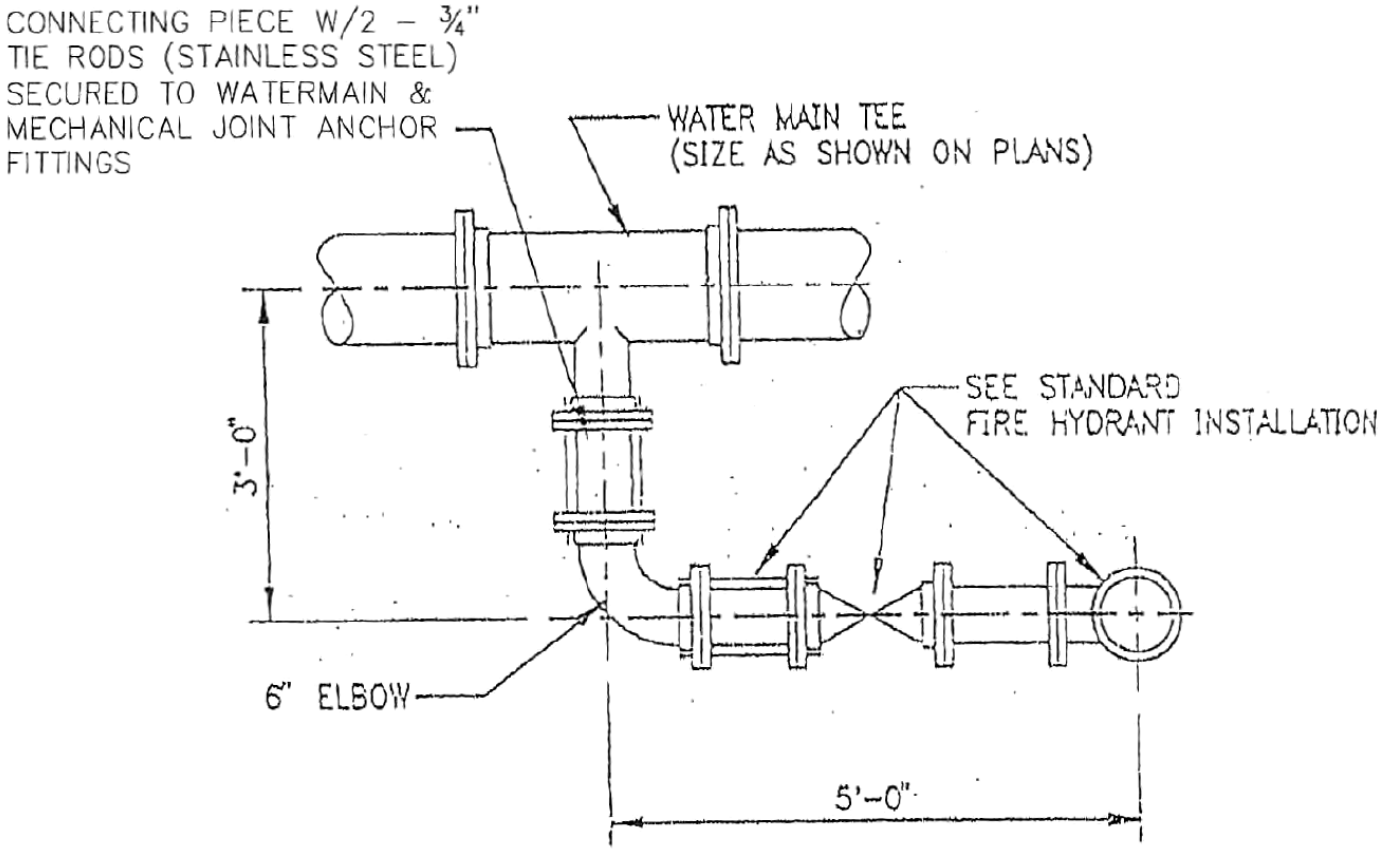

FIRE HYDRANT – 90° CONNECTION

(FOR WATER MAIN SIZES GREATER THAN 12")

Not To Scale

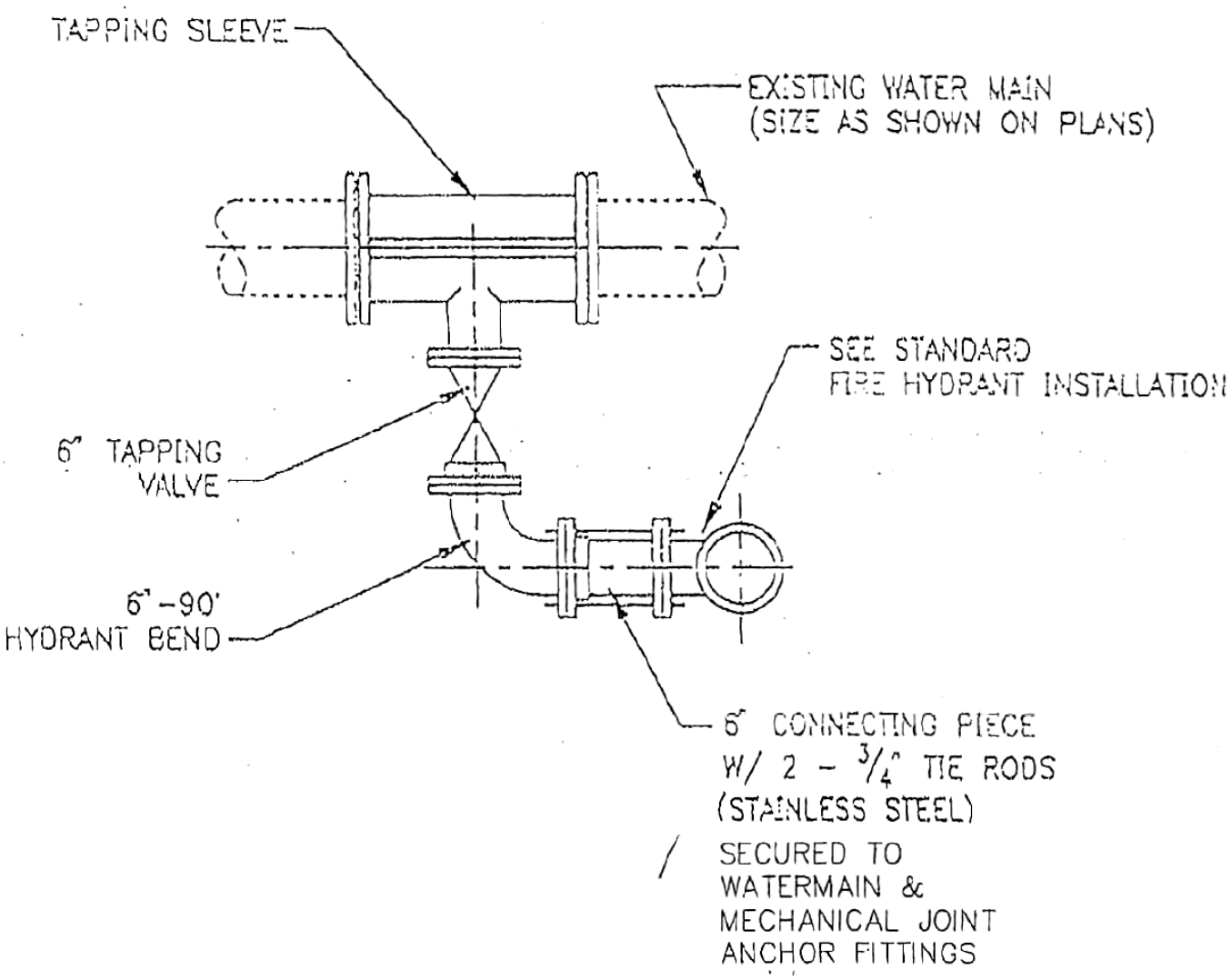

FIRE HYDRANT – 90° PRESSURE TAP

Not To Scale

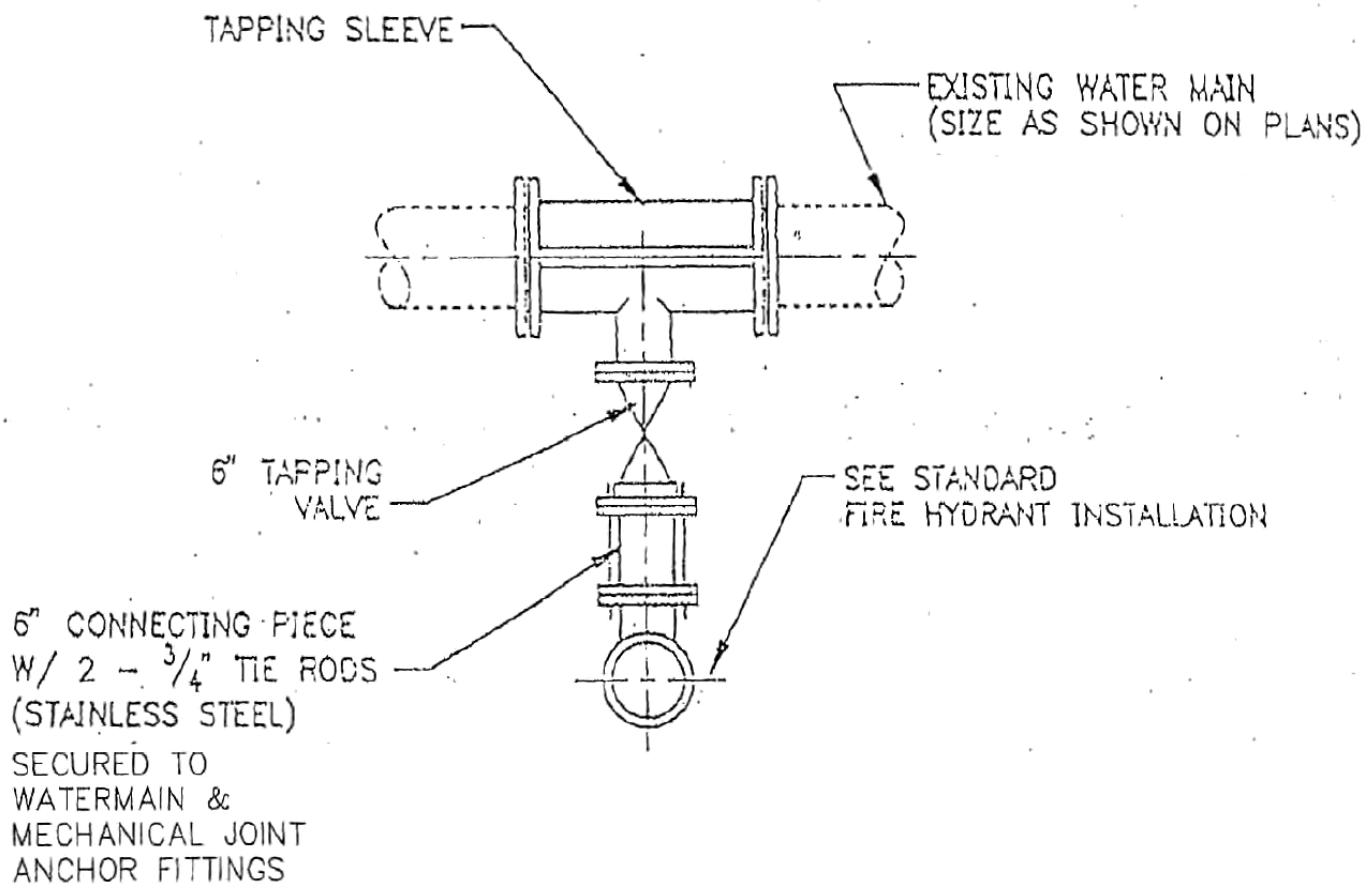

FIRE HYDRANT – PRESSURE TAP

Not To Scale

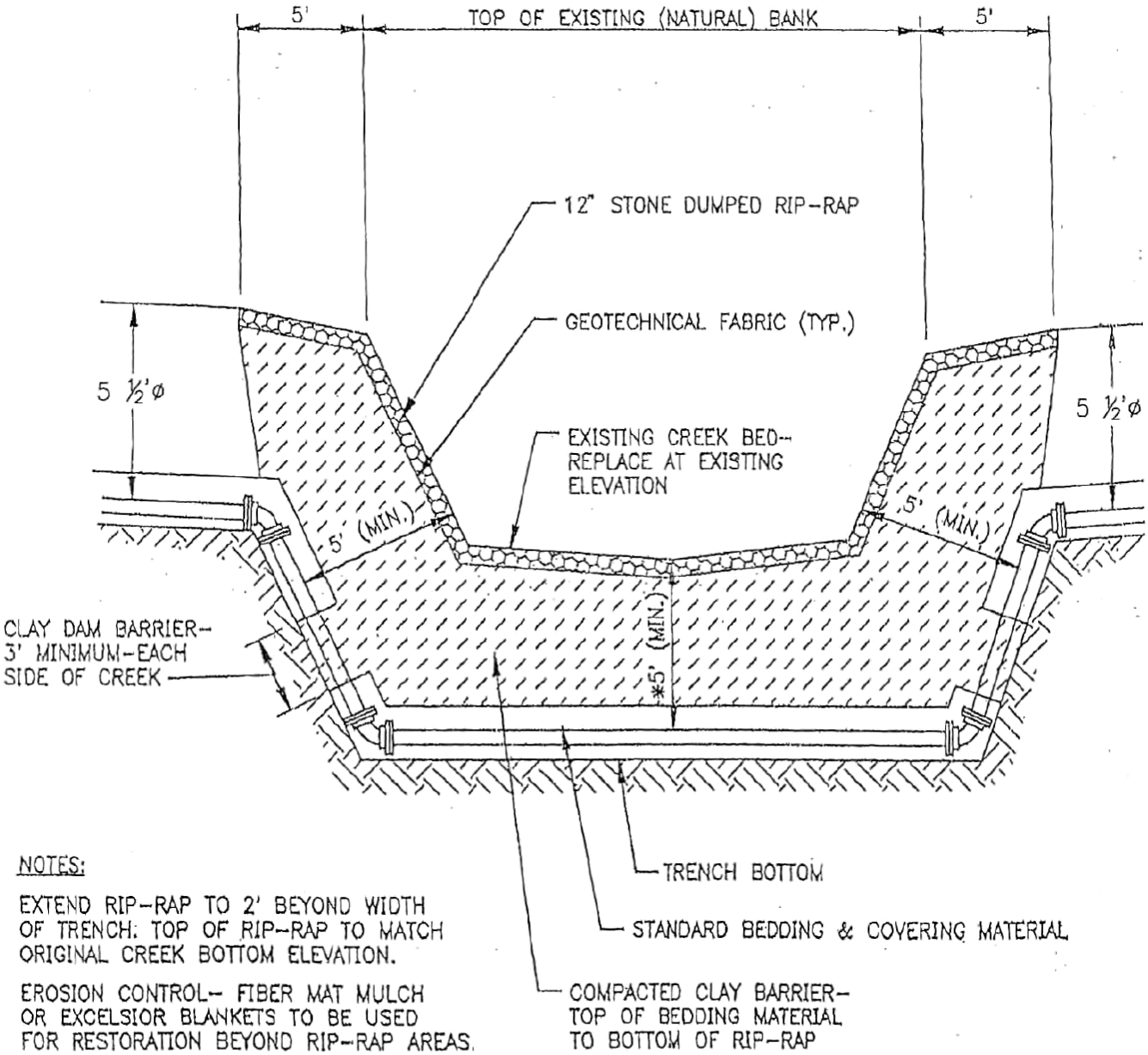

NOTES:

EXTEND RIP-RAP TO 2' BEYOND WIDTH OF TRENCH: TOP OF RIP-RAP TO MATCH ORIGINAL CREEK BOTTOM ELEVATION.

EROSION CONTROL- FIBER MAT MULCH OR EXCELSIOR BLANKETS TO BE USED FOR RESTORATION BEYOND RIP-RAP AREAS.

* P.C.C. CAP REQUIRED IF 5' MINIMUN DEPTH CANNOT BE MAINTAINED

WATERMAIN STREAM CROSSING DETAIL

Not To Scale

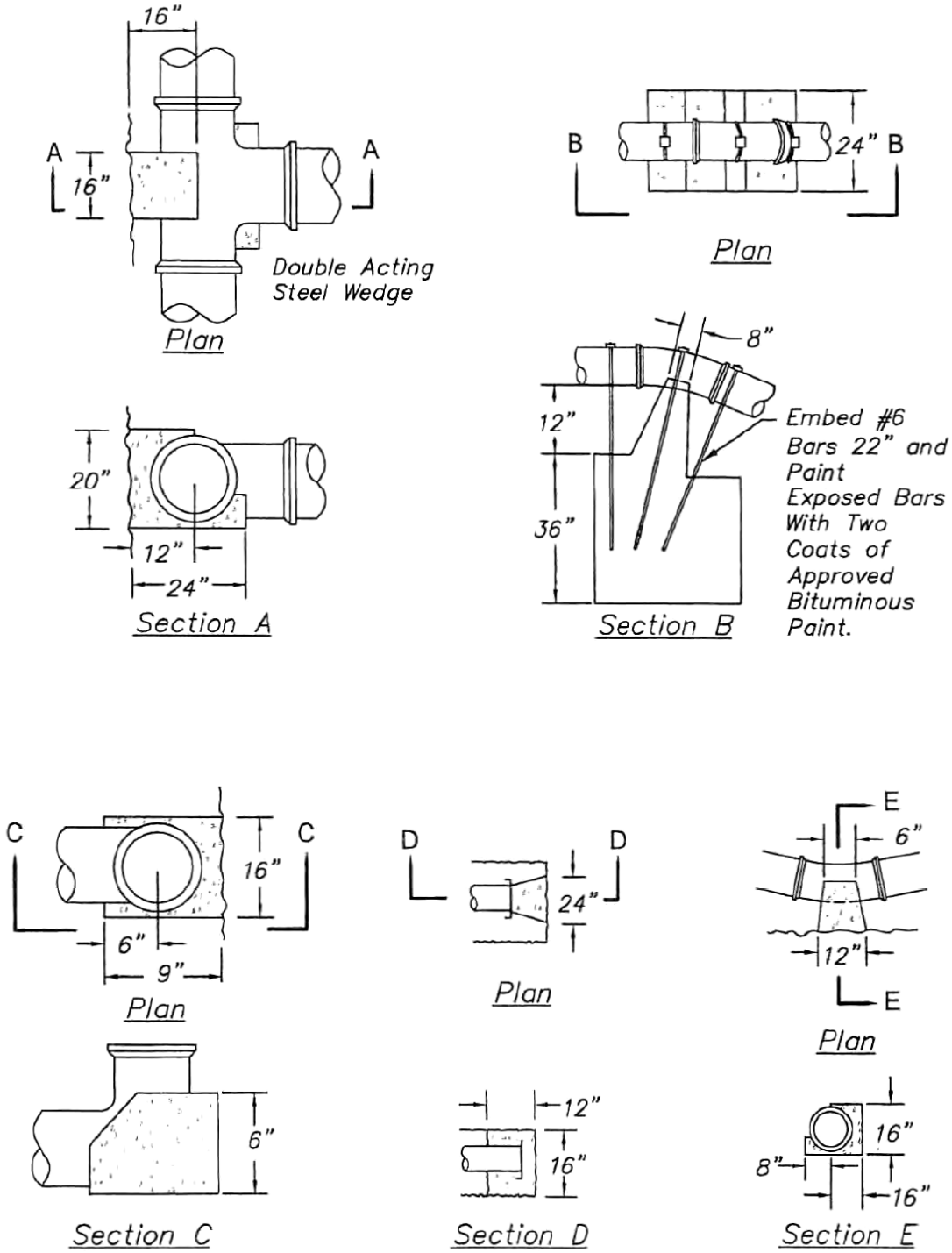

THRUST BLOCK DETAILS

Not To Scale

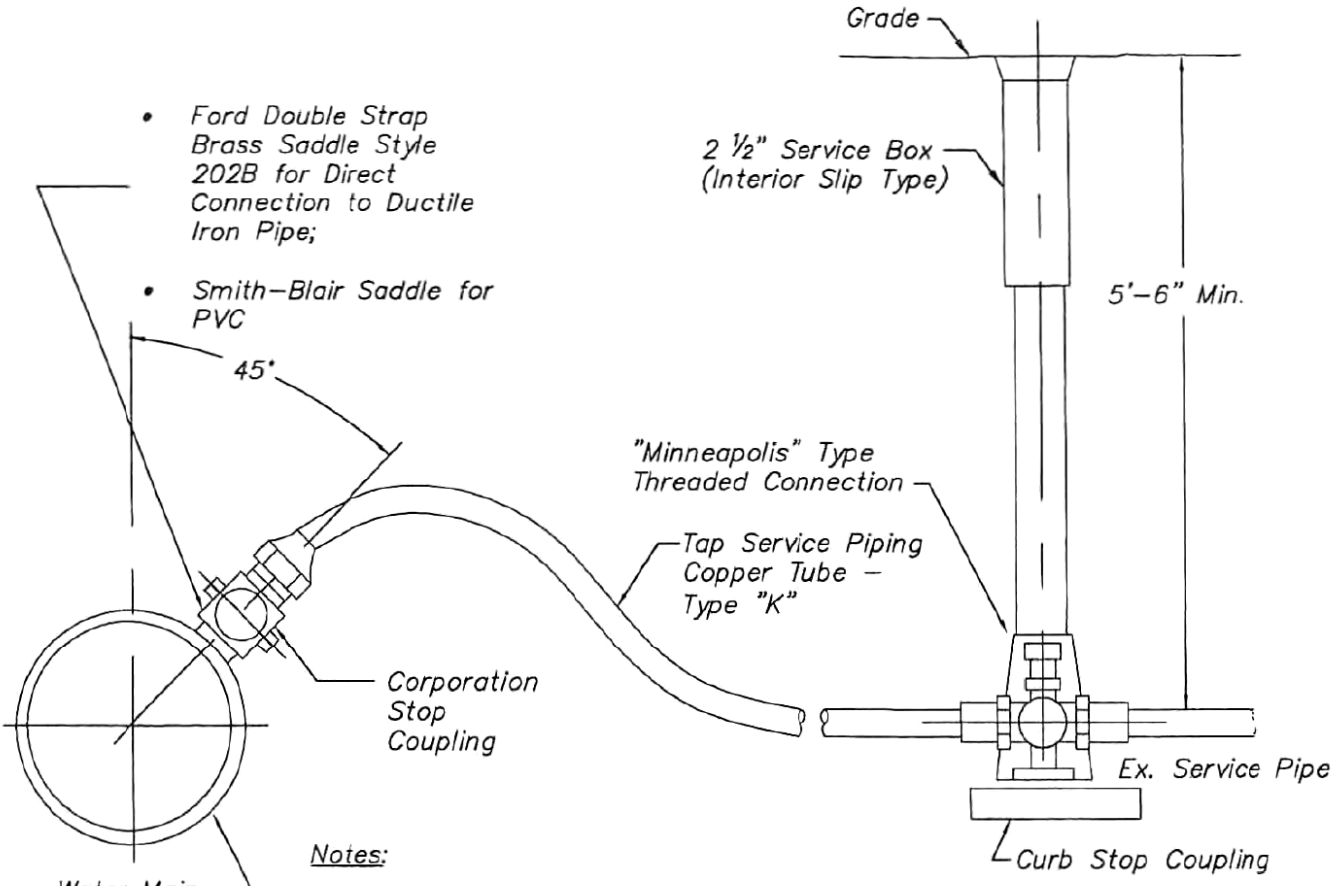

Notes:

1. Service Pipe to Be Placed In Trench to Allow at Least One (1) Foot Extra in its Length.
2. Upon Completion of Water Service Construction All Boxes Are to be Fully Extended and Left Protruding Above the Proposed Grade.
3. Granular Backfill to be Placed Under Pavement as Specified
4. Jet All Trenches.

WATER SERVICE DETAIL

Not To Scale

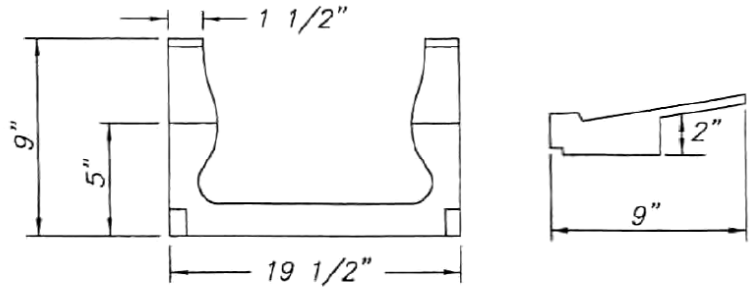

STEP DETAIL

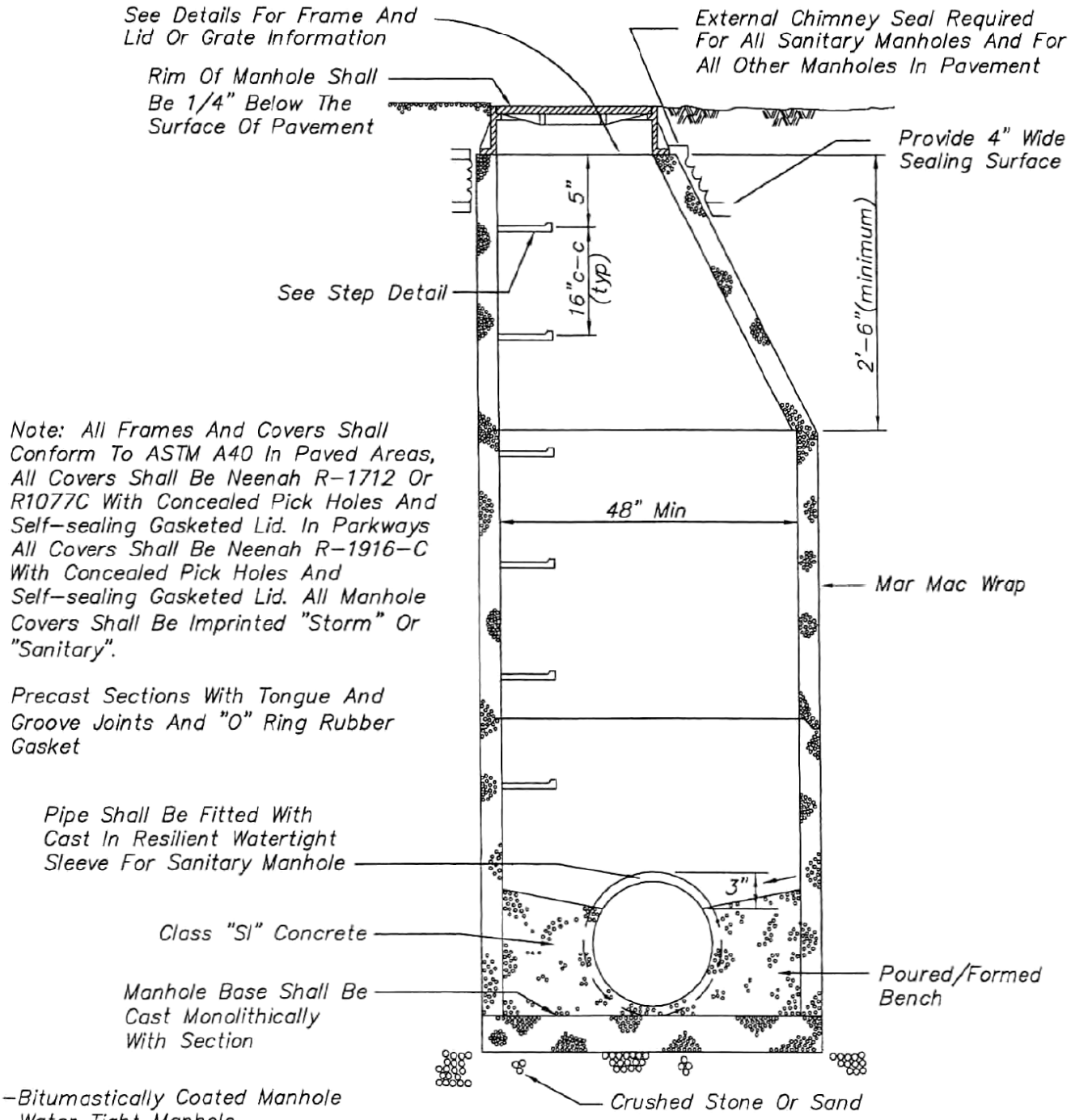

-Bitumastically Coated Manhole
-Water Tight Manhole
-Non Shear Coupling
-Booted Manholes

MANHOLE DETAIL

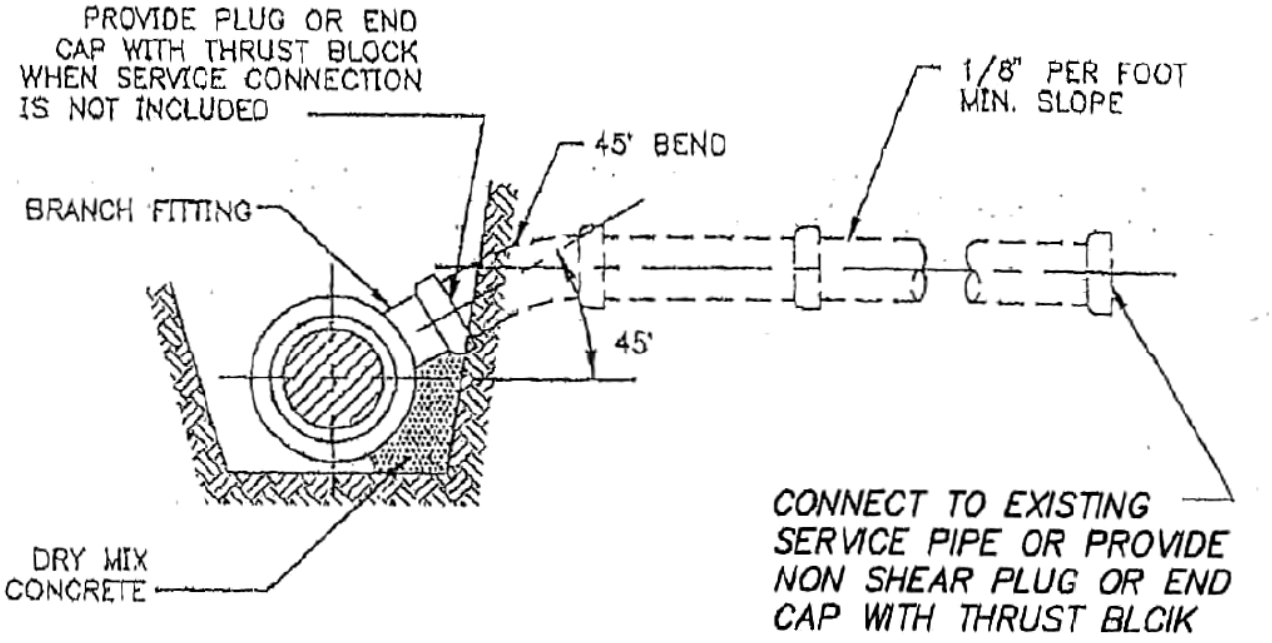

SANITARY SEWER SERVICE DETAIL

FOR SEWER INVERT DEPTHS TO 12 FEET
(NEW CONSTRUCTION)
Not To Scale

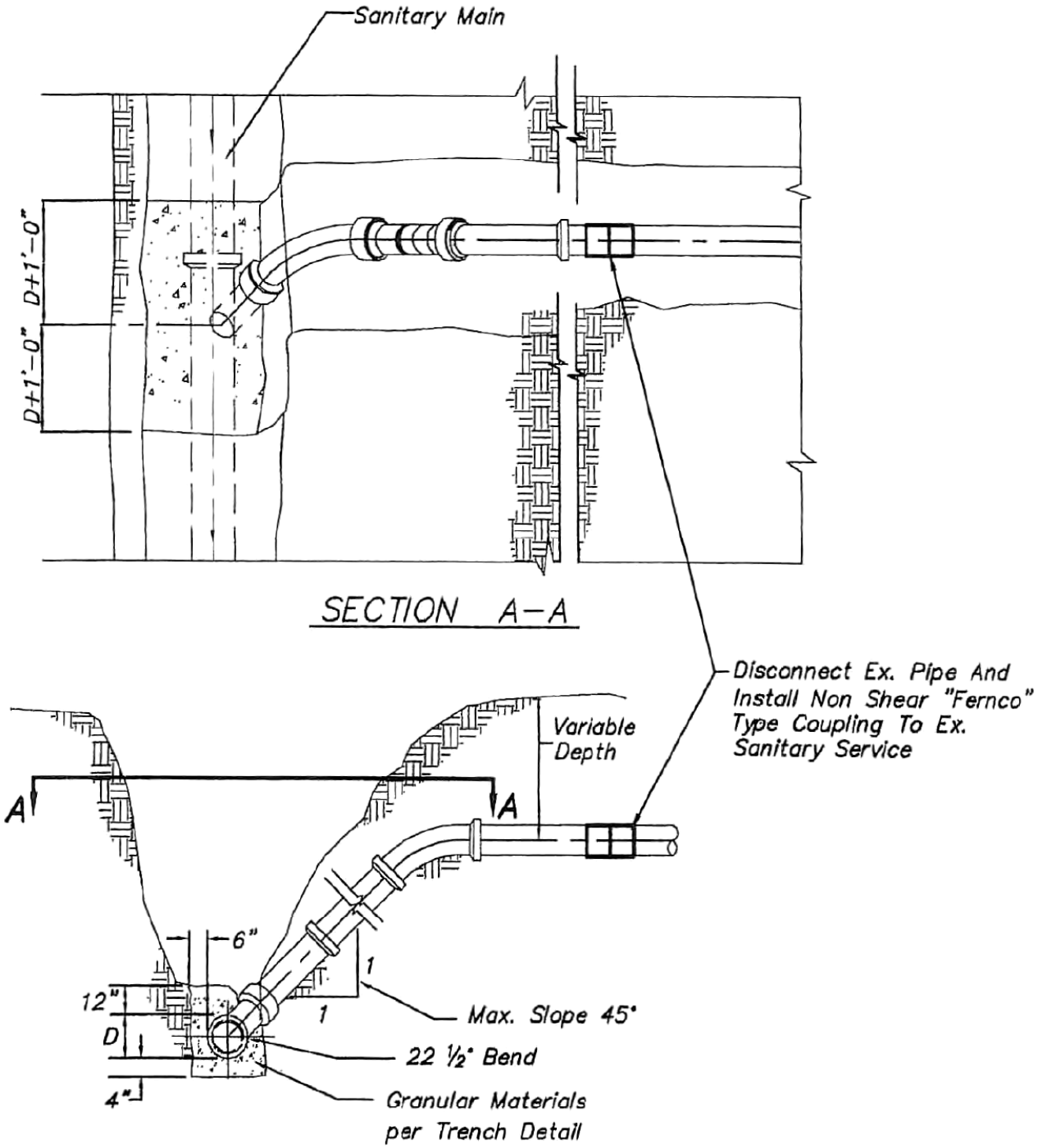

SANITARY SERVICE RISER DETAIL

Not to Scale

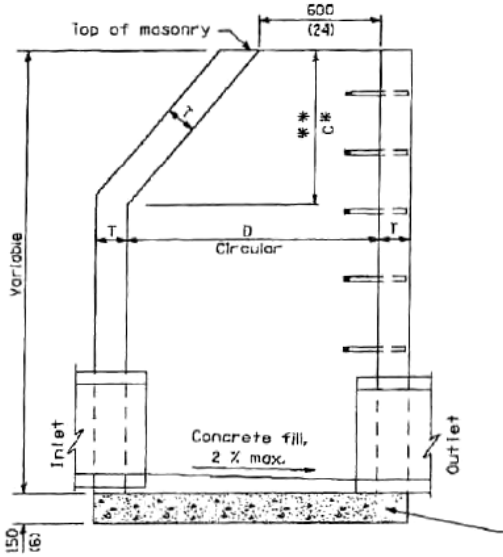

ELEVATION - ECCENTRIC

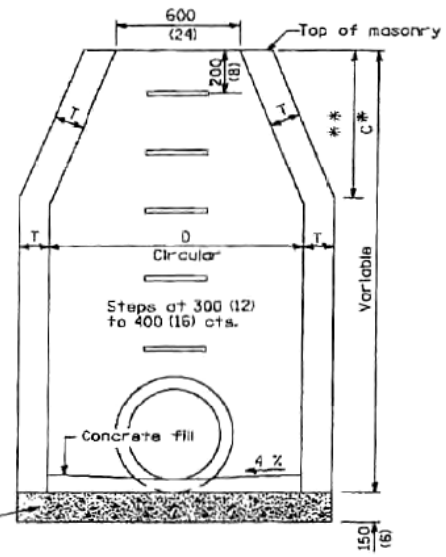

ELEVATION - CONCENTRIC

Cast-in-place concrete

ALTERNATE MATERIALS FOR WALLS	D	C	T (min.)
Concrete Masonry Unit	1.2 m (4'-0") 1.5 m (5'-0")	750 (30) 1.15 m (3'-9")	125 (5) 125 (5)
Brick Masonry	1.2 m (4'-0") 1.5 m (5'-0")	750 (30) 1.15 m (3'-9")	200 (8) 200 (8)
Precast Reinforced Concrete Section	1.2 m (4'-0") 1.5 m (5'-0")	750 (30) 1.15 m (3'-9")	100 (4) 125 (5)
Cast-in-place Concrete	1.2 m (4'-0") 1.5 m (5'-0")	750 (30) 1.15 m (3'-9")	150 (6) 150 (6)

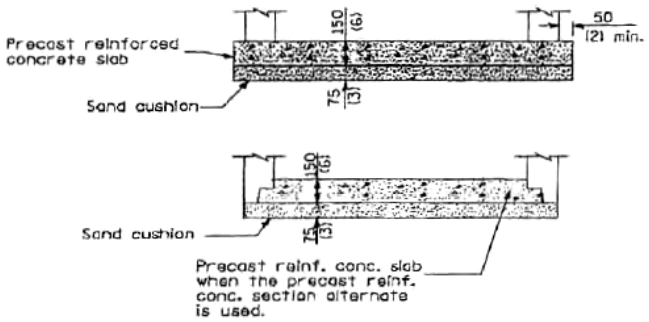

ALTERNATE BOTTOM SLAB

GENERAL NOTES

See Standard 602701 for details of steps.

* Dimension "C" for Precast Reinforced Concrete Sections may vary from the dimension given to plus 150 mm (6").

** See Standard 602601 for Optional Precast Reinforced Concrete Flat Slab Top.

All dimensions are in millimeters (inches) unless otherwise shown.

DATE	REVISIONS
4-1-06	Revised detail for
	concrete fill in
	elevation views.
1-1-97	Renum. Standard 1527-10.

MANHOLE TYPE A

STANDARD 602401-01

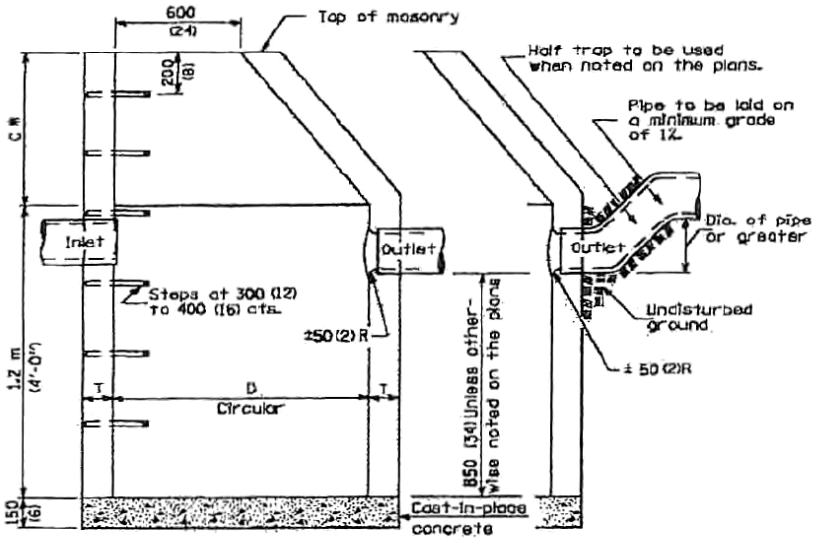

ELEVATION
(Standard Outlet)

ELEVATION
(Half Trap)

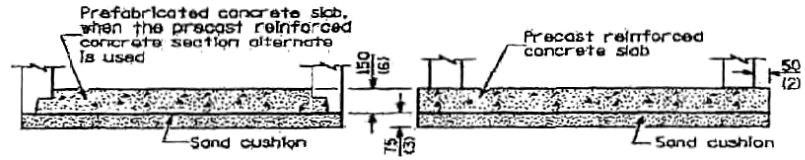

ALTERNATE BOTTOM SLAB

ALTERNATE MATERIALS FOR WALLS	D	C	T (min.)
Concrete Masonry Unit	1.2 m (4'-0") 1.5 m (5'-0")	750 (30) 1.15 m (3'-9")	125 (5) 125 (5)
Brick Masonry	1.2 m (4'-0") 1.5 m (5'-0")	750 (30) 1.15 m (3'-9")	200 (8) 200 (8)
Precast Reinforced Concrete Section	1.2 m (4'-0") 1.5 m (5'-0")	750 (30) 1.15 m (3'-9")	100 (4) 125 (5)
Cast-in-place Concrete	1.2 m (4'-0") 1.5 m (5'-0")	750 (30) 1.15 m (3'-9")	150 (6) 150 (6)

NOTE:
—Casted With
"DO NOT DUMP DRAINS TO LAKE"
—Manhole Steps — 16" C–C
MA Industries
Co Polymer Plastic With
Continuous ½" Steel Reinforcing

GENERAL NOTES

All catch basins shall be 1.2 m (4'-0") in diameter unless otherwise noted on the plans.

* Dimension C for precast reinforced concrete section may vary from the dimension given to plus 150 mm (6").

See Standard 602601 for optional precast reinforced concrete flat slab top.

See Standard 602701 for details of steps.

All dimensions are in millimeters (inches) unless otherwise shown.

DATE	REVISIONS
1-1-97	Renum. Standard 1514-10.
	Revised 1st G.N.
6-15-94	Moved G.N. to Specs.
	Del. step details & Cook
	Cty. note. Rev. half trap

CATCH BASIN TYPE A

STANDARD 602001

Neenah or East Jordan

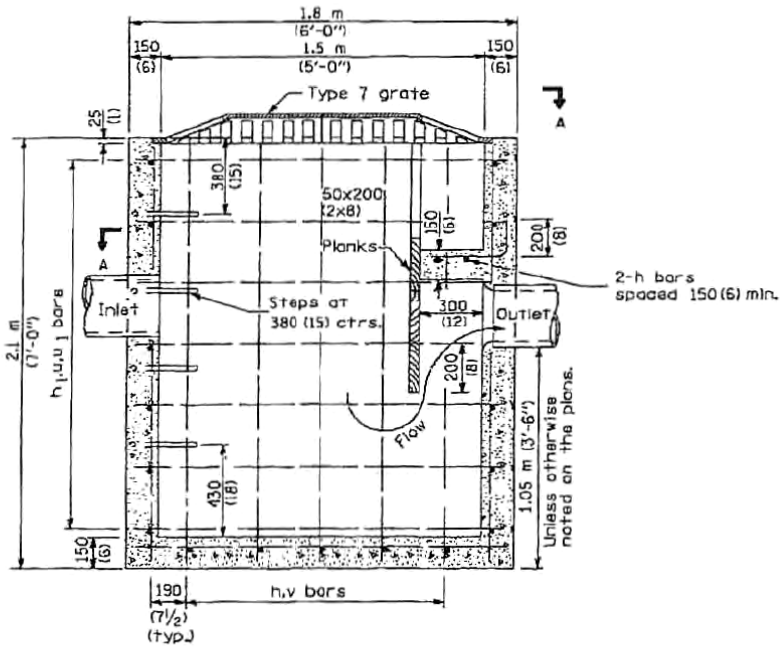

ELEVATION

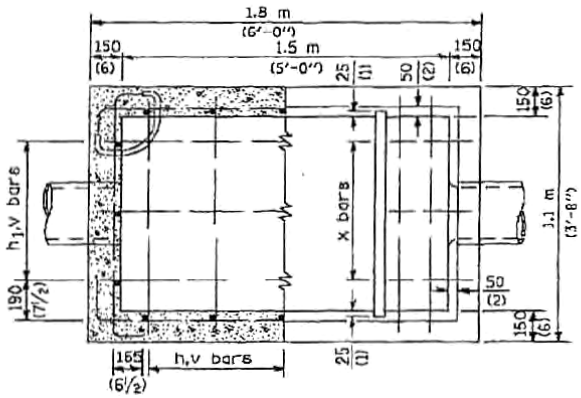

SECTION A-A

(Grating removed to show plan of baffles.)

MATERIALS REQUIRED FOR ONE (1)
TYPE B CATCH BASIN

Bar	Qty.	Size	Shape	Length
h	7	No. 13 (No. 4)		1.02 m (3'-5")
h_1	3	No. 13 (No. 4)		1.72 m (5'-9")
u	14	No. 13 (No. 4)		2.10 m (7'-0")
u_1	14	No. 13 (No. 4)		1.35 m (4'-6")
v	16	No. 13 (No. 4)		2.02 m (6'-9")
x	3	No. 13 (No. 4)		0.58 m (1'-11")
Concrete			m^3 (cu. yd.)	1.90 (2.5)
Reinforcement bars			kg (lbs.)	95 (210)

All bars shall be at 300 (12) centers unless otherwise shown. Reinforcement bar clearance shall be 40 (1½).

Costed With
"DO NOT DUMP DRAINS TO LAKE"

GENERAL NOTES

See Standard 602701 for details of steps.

All dimensions are in millimeters (inches) unless otherwise shown.

DATE	REVISIONS
1-1-07	Soft converted metric reinforcement bars.
1-1-97	Renum. Standard 1514-10.

CATCH BASIN
TYPE B

STANDARD 602006-01

Neenah or East Jordan

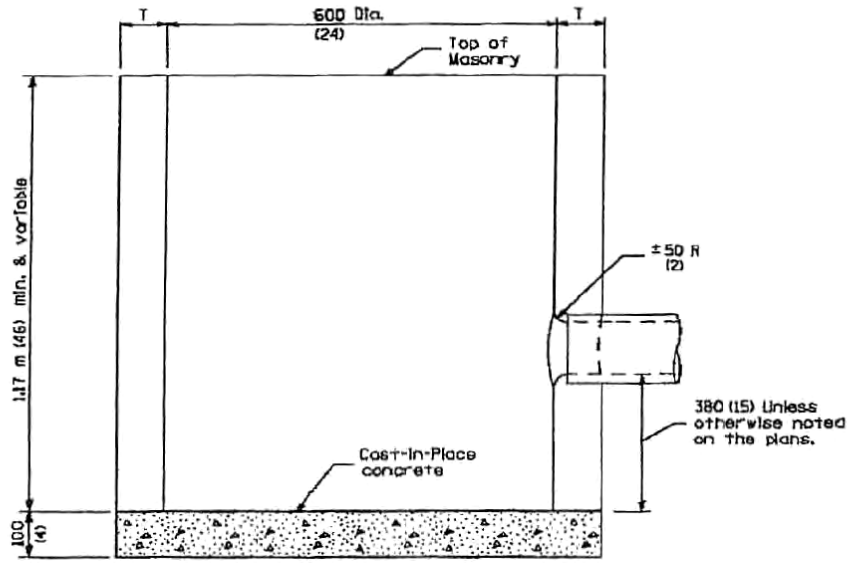

ELEVATION

ALTERNATE MATERIALS FOR WALLS	T (min)
Precast Reinforced Concrete Section	75 (3)
Concrete Masonry Unit	125 (5)
Cast-in-Place Concrete	150 (6)
Brick Masonry	200 (8)

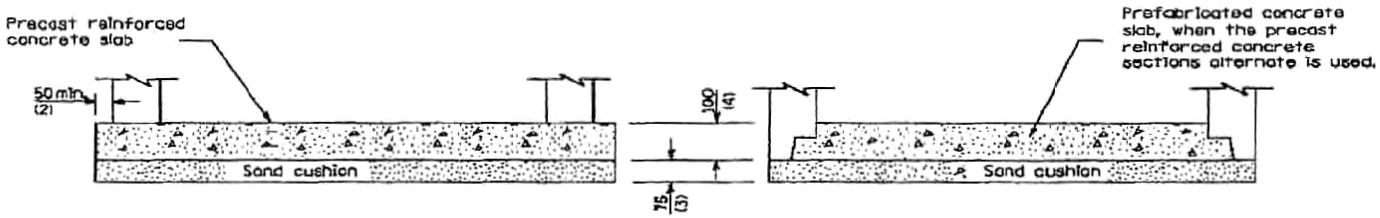

ALTERNATE BOTTOM SLAB

Casted With
"DO NOT DUMP DRAINS TO LAKE"

All dimensions are in millimeters (inches) unless otherwise shown.

DATE	REVISIONS
1-1-97	Renum. Standard 1538-6.
6-15-94	Moved note to Specs.
	Added Metric.

CATCH BASIN TYPE C

STANDARD 602011

Neenah or East Jordan

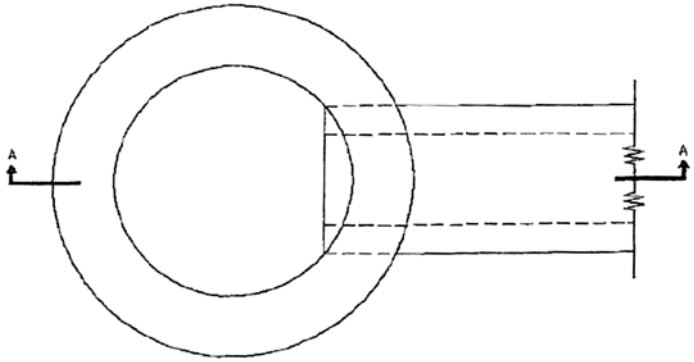

PLAN

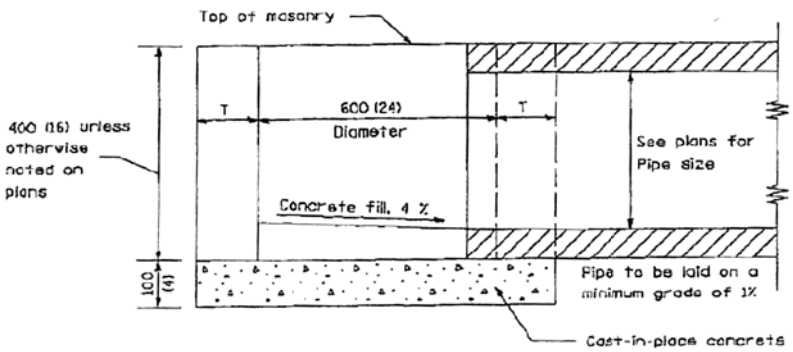

SECTION A-A

ALTERNATE MATERIALS FOR WALLS	T
BRICK MASONRY	200 (8)
CAST-IN-PLACE CONCRETE	150 (6)
CONCRETE MASONRY UNIT	125 (5)
PRECAST REINFORCED CONCRETE SECTION	75 (3)

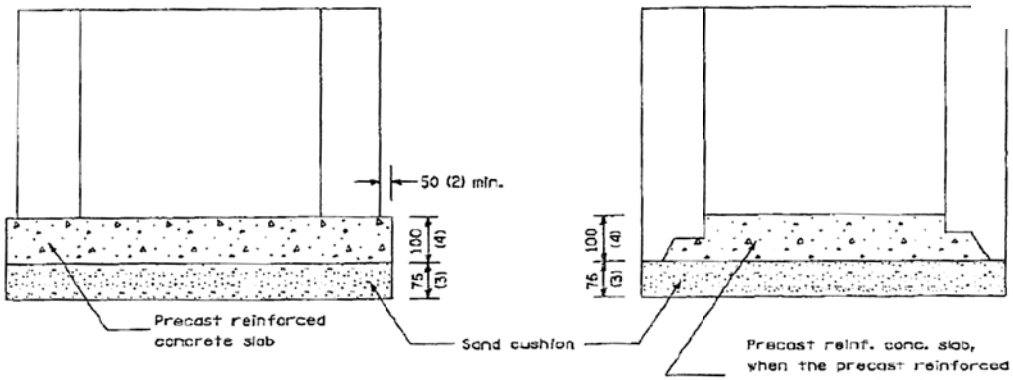

ALTERNATE METHODS

All dimensions are in millimeters (inches) unless otherwise shown.

Casted With
"DO NOT DUMP DRAINS TO LAKE"

DATE	REVISIONS
4-1-06	Added concrete fill in bottom of inlet.
1-1-97	Renum. Standard 1683-S

INLET - TYPE A

STANDARD 602301-01

Neenah or East Jordan

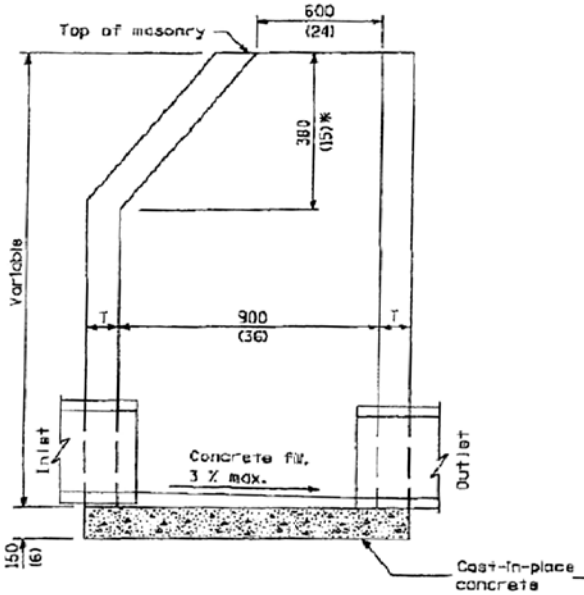

ELEVATION - ECCENTRIC

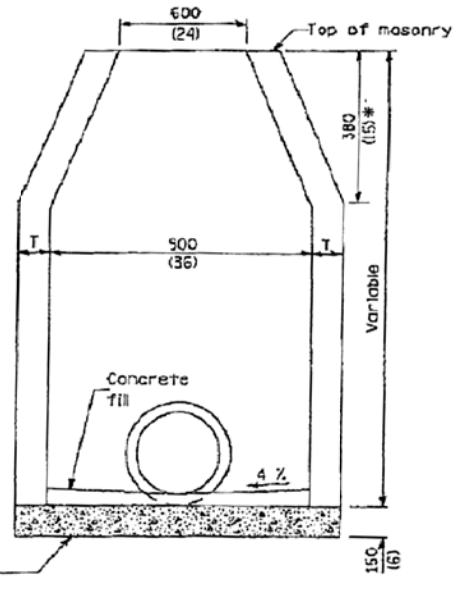

ELEVATION - CONCENTRIC

ALTERNATE MATERIALS FOR WALLS	T (min.)
Concrete Masonry Unit	125 (5)
Brick Masonry	200 (8)
Precast Reinforced Concrete Section	75 (3)
Cast-in-Place Concrete	150 (6)

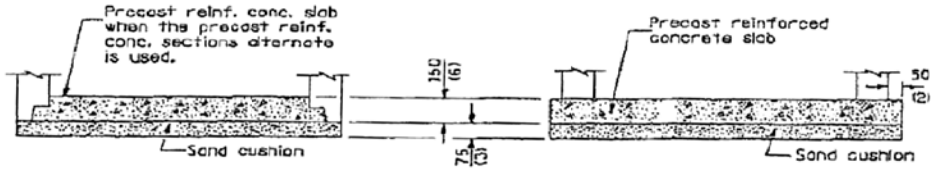

ALTERNATE BOTTOM SLAB

Casted With
"DO NOT DUMP DRAINS TO LAKE"

GENERAL NOTES

* This dimension for Precast Reinforced Concrete Sections may vary from the dimension given to plus 150 mm (6").

See Standard 602601 for Optional Precast Reinforced Concrete Flat Slab Top.

All dimensions are in millimeters (inches) unless otherwise shown.

DATE	REVISIONS
4-1-06	Revised detail for
	concrete fill in
	elevation views.
1-1-97	Renum. Standard 2349-1.
	Added set of details
	with paved bottoms.

INLET - TYPE B

STANDARD 602306-01

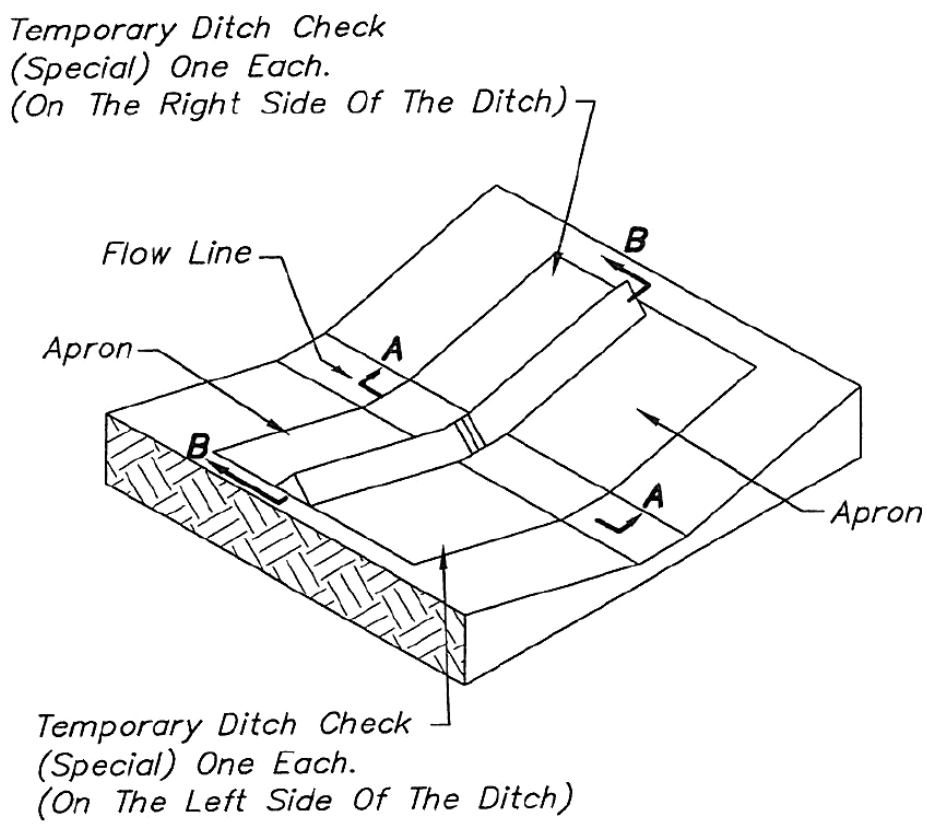

Silt Dike Unit
Isometric

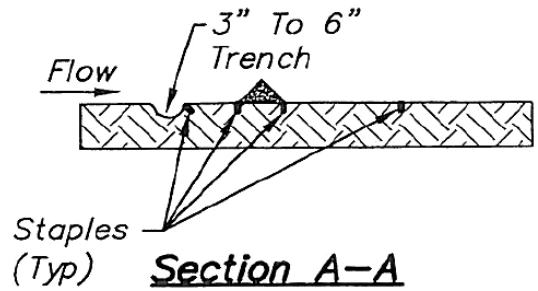

Section A–A

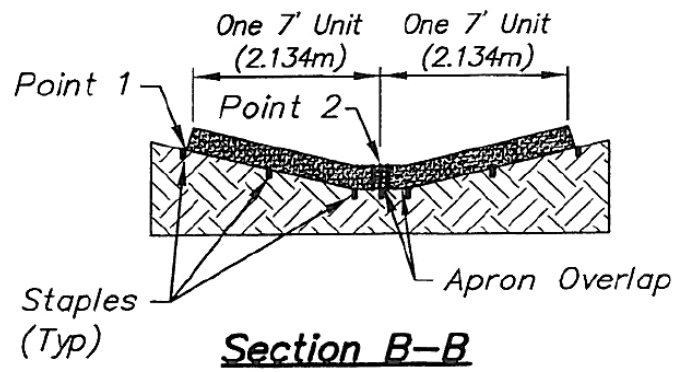

Section B–B

Staples Shall Be Placed Where The Units Overlap And In The Center Of The 7' Unit As Shown On The Diagram

Point 1 Must Be Higher Than Point 2 To Insure That Water Flows Over The Dike And Not Around The Ends.

Note:
The Installation Shown Above Would Be Paid For As Two Each TemporaryDitch Check (Special)

Scale: 1"=5'

Revisions	Date
Dual Dimensions	10/23/01

LakeCounty
Division of Transportation

Approved By: G.N. Wiesner
Date: July 23, 1999

TRIANGULAR SILT DIKE INSTALLATION FOR ROADWAY DITCH OR DRAINAGE DITCH

LC1005

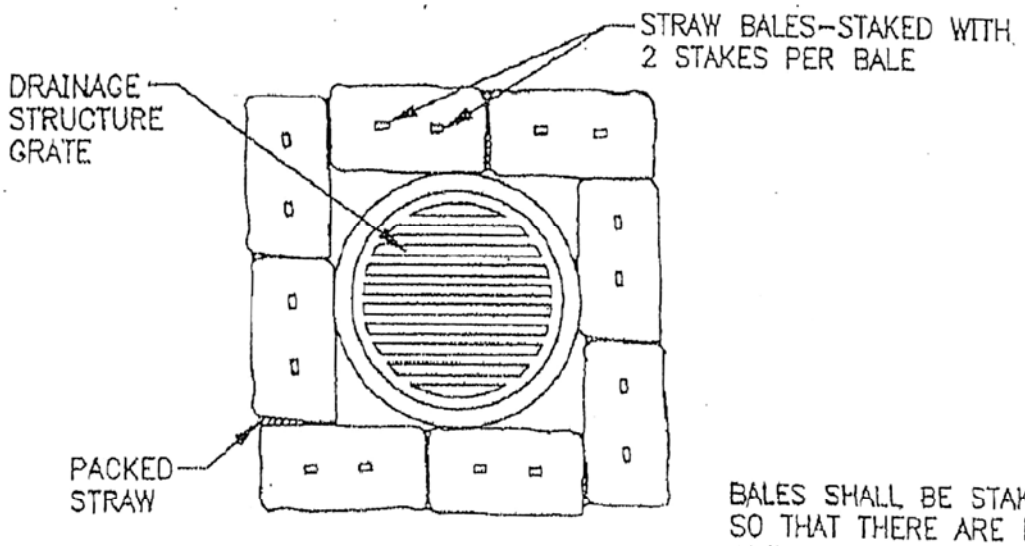

PLAN

BALES SHALL BE STAKED SO THAT THERE ARE NO OPEN SPACES BETWEEN BALES.

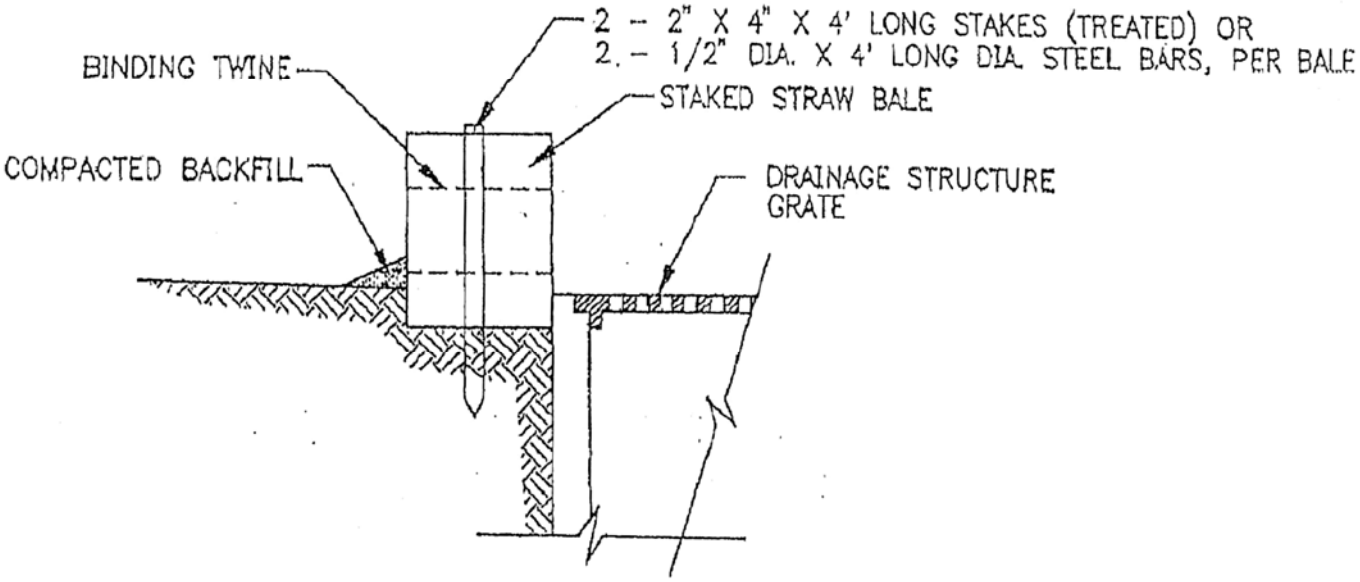

SECTION

SEDIMENT BARRIER

Not To Scale

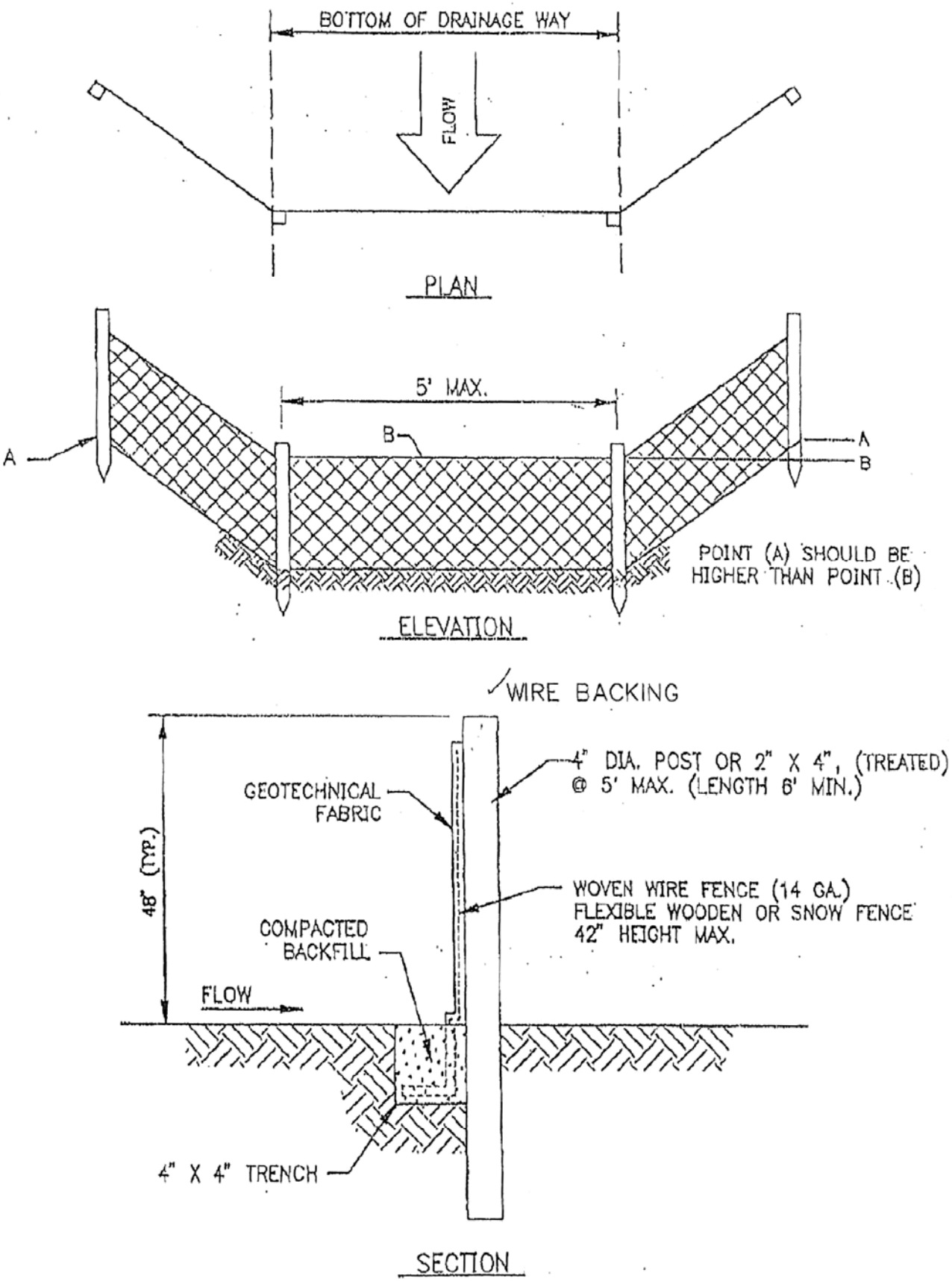

DITCH CHECK

Not To Scale

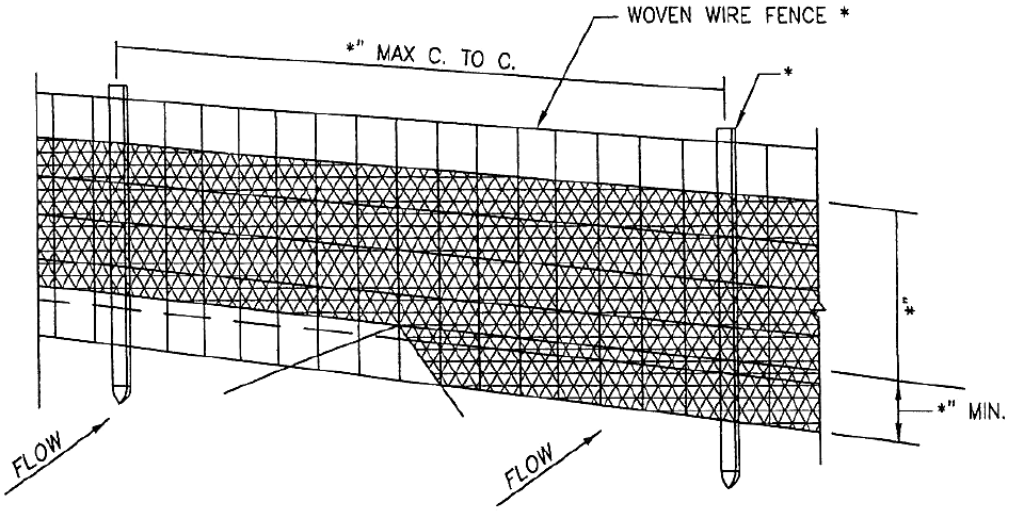

PERSPECTIVE VIEW

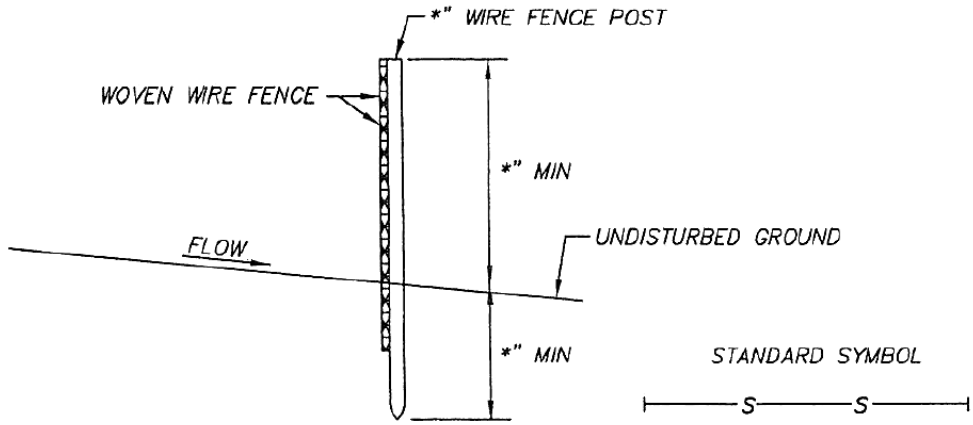

SECTION

CONSTRUCTION NOTES FOR FABRICATED SILT FENCE

* Silt Fence Material and Installation Shall Be In Compliance With AASHTO 288–00

SILT FENCE DETAIL

Not To Scale

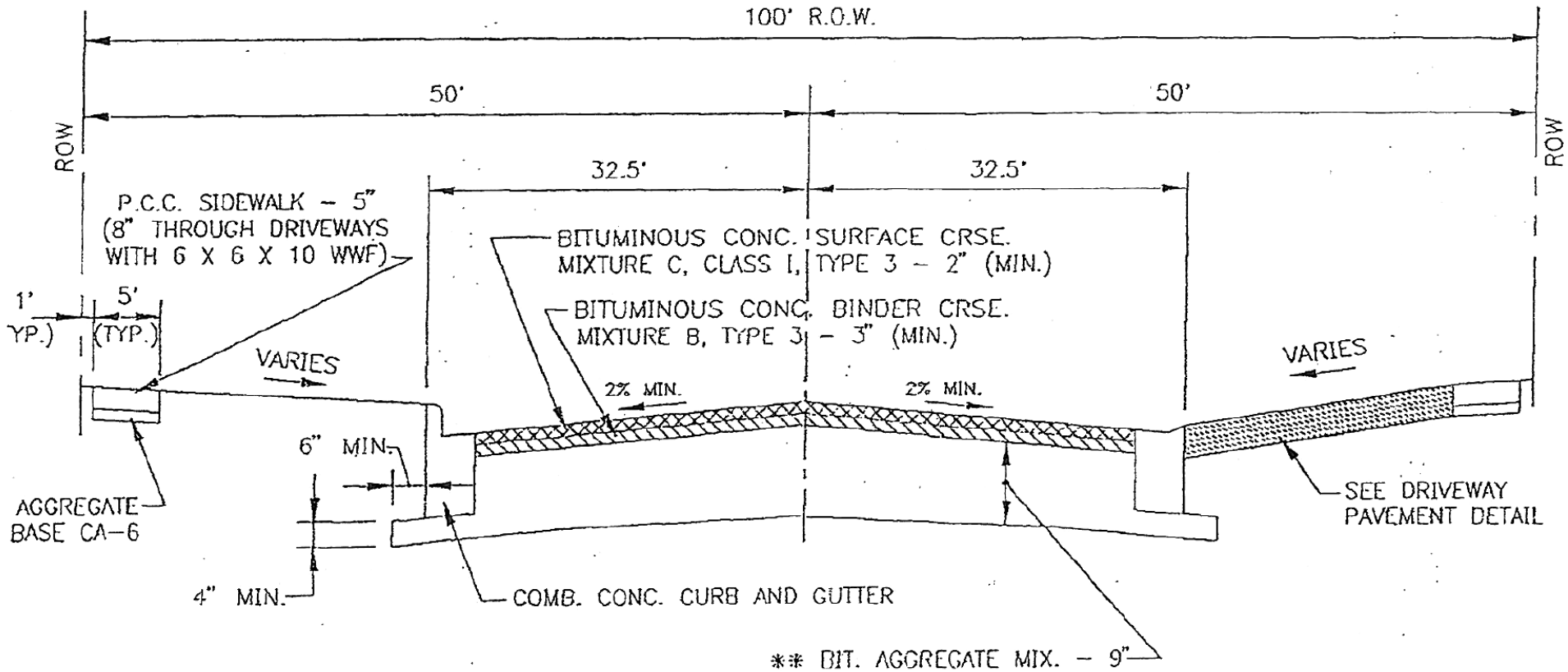

** EQUIVALENT CONCRETE PAVEMENT
IS 8" P.C.C. AND 8" CA-6 STONE BASE

STREET CROSS SECTION, ARTERIAL

Not To Scale

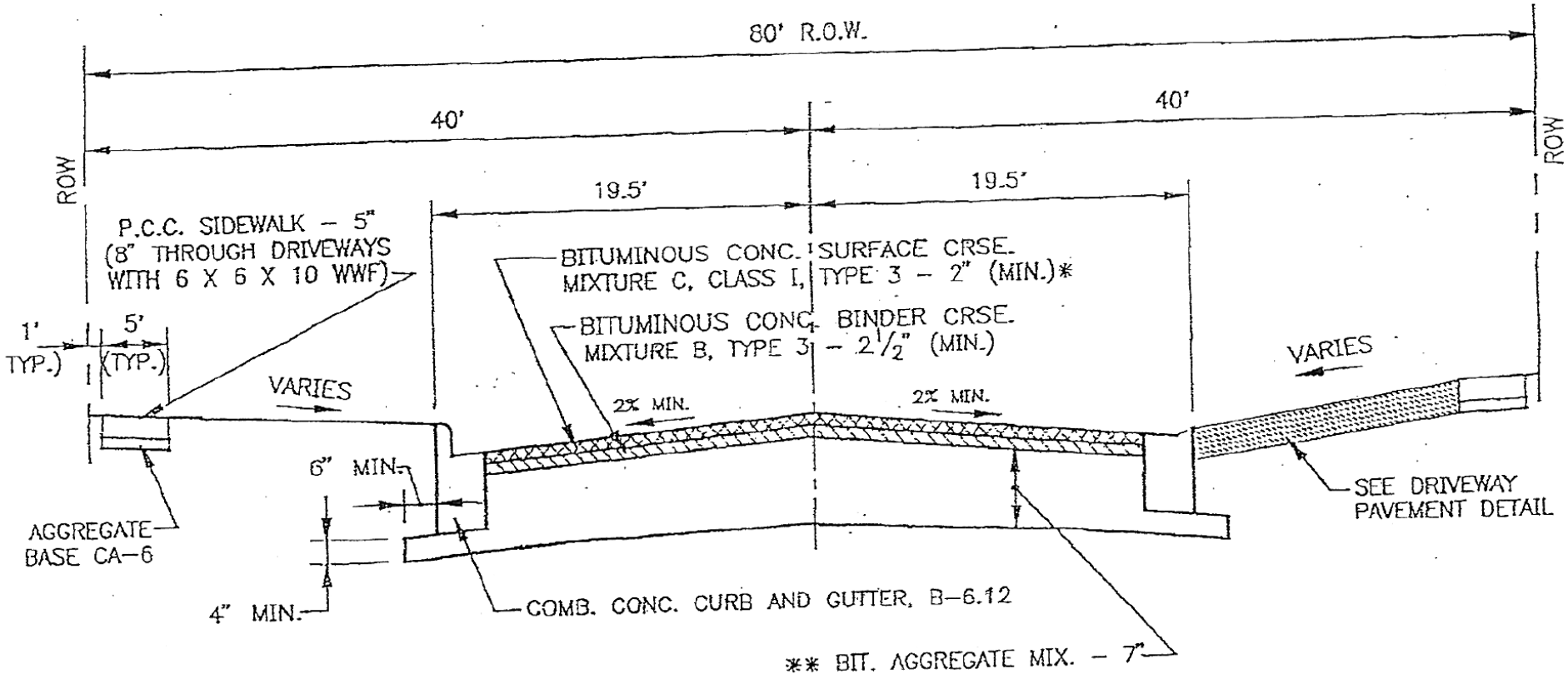

** EQUIVALENT CONCRETE PAVEMENT
IS 6" P.C.C. AND 8" CA–6 STONE BASE

STREET CROSS SECTION, COLLECTOR/INDUSTRIAL

*MINIMUM REQUIREMENTS IN RESIDENTIAL DISTRICTS:
1 ½" BIT. CONC. SURFACE WITH 6" BAM OR 15" CA–6 BASE
(NO CONCRETE PAVEMENT IN RESIDENTIAL DISTRICTS)
Not To Scale

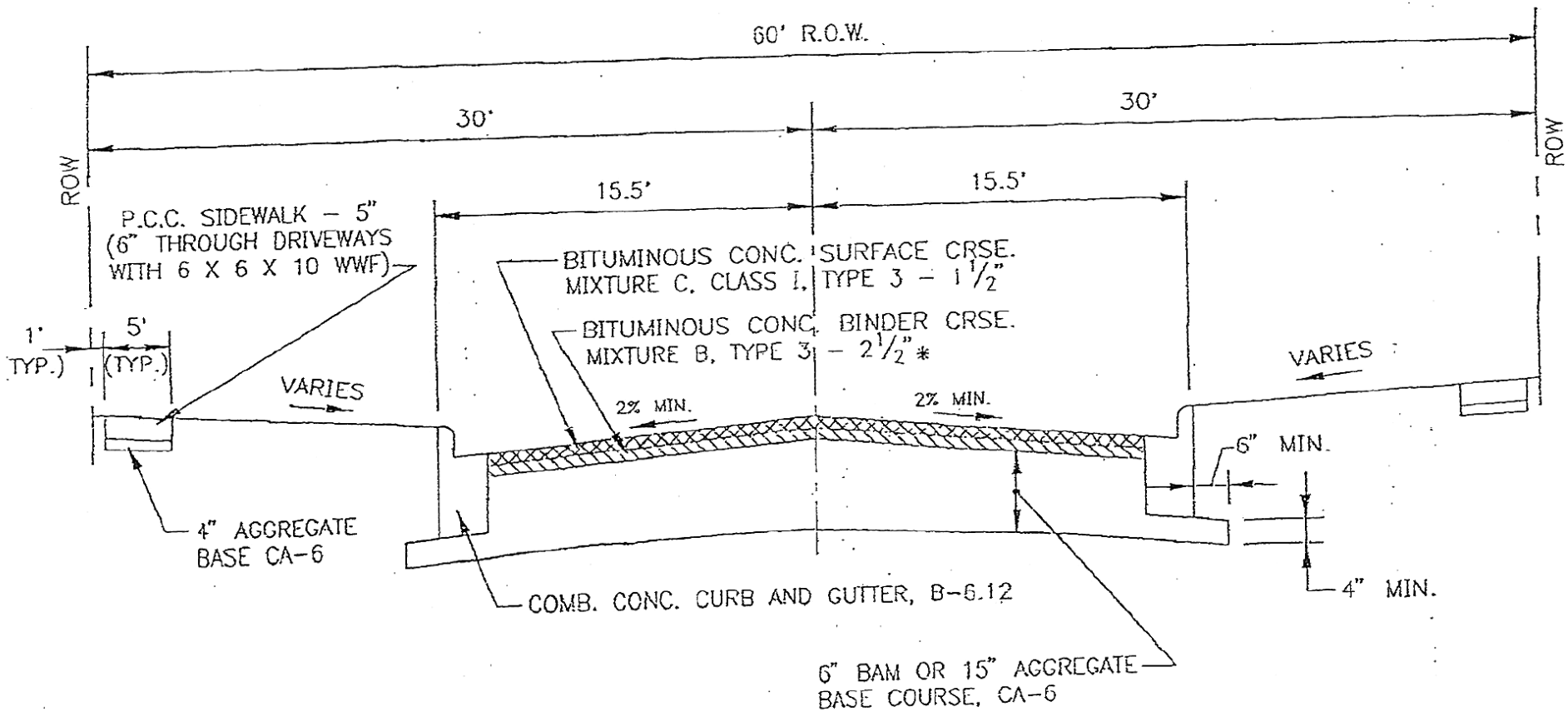

STREET CROSS SECTION, MINOR/CUL-DE-SAC

*MINIMUM REQUIREMENTS IN RESIDENTIAL DISTRICTS:
2" BIT. CONC. SURFACE WITH 12.5" CA-6 BASE

Not To Scale

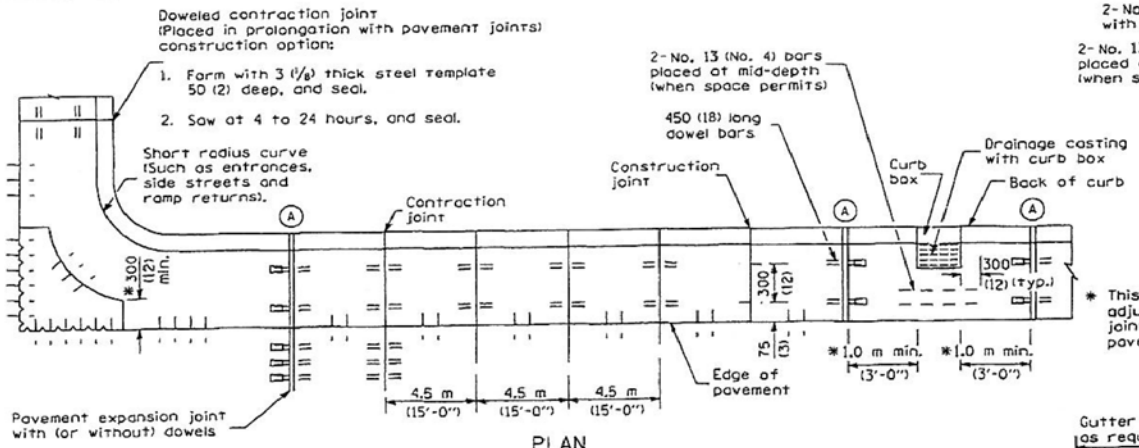

PLAN

ADJACENT TO PCC PAVEMENT OR PCC BASE COURSE

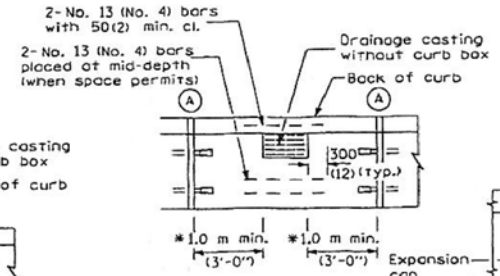

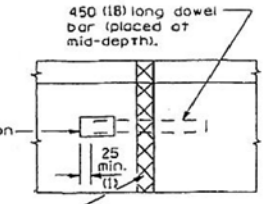

DETAIL Ⓐ

EXPANSION JOINT

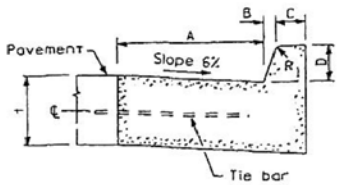

BARRIER CURB

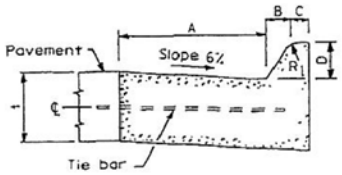

MOUNTABLE CURB

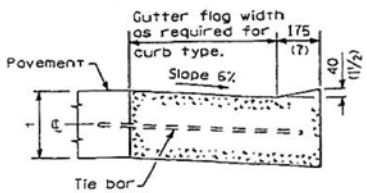

DEPRESSED CURB (TYPICAL)

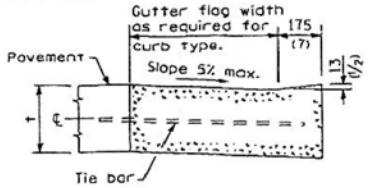

DEPRESSED CURB ADJACENT TO CURB RAMP ACCESSIBLE TO THE DISABLED

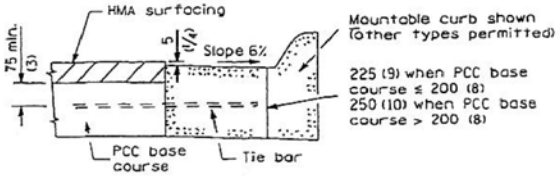

ADJACENT TO PCC BASE COURSE WITH HMA SURFACING

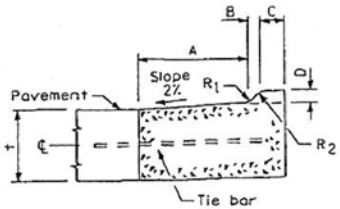

M-5.15 (M-2.06) and M-5.30 (M-2.12)

TABLE OF DIMENSIONS
BARRIER CURB

TYPE	A	B	C	D	R_1
B-15.30 (B-6.12)	300 (12)	25 (1)	150 (6)	150 (6)	25 (1)
B-15.45 (B-6.18)	450 (18)	25 (1)	150 (6)	150 (6)	25 (1)
B-15.60 (B-6.24)	600 (24)	25 (1)	150 (6)	150 (6)	25 (1)
B-22.30 (B-9.12)	300 (12)	50 (2)	125 (5)	225 (9)	25 (1)
B-22.45 (B-9.18)	450 (18)	50 (2)	125 (5)	225 (9)	25 (1)
B-22.60 (B-9.24)	600 (24)	50 (2)	125 (5)	225 (9)	25 (1)

TABLE OF DIMENSIONS
MOUNTABLE CURB

TYPE	A	B	C	D	R_1	R_2
M-5.15 (M-2.06)	150 (6)	50 (2)	100 (4)	50 (2)	75 (3)	50 (2)
M-5.30 (M-2.12)	300 (12)	50 (2)	100 (4)	50 (2)	75 (3)	50 (2)
M-10.15 (M-4.06)	150 (6)	100 (4)	75 (3)	100 (4)	75 (3)	NA
M-10.30 (M-4.12)	300 (12)	100 (4)	75 (3)	100 (4)	75 (3)	NA
M-10.45 (M-4.18)	450 (18)	100 (4)	75 (3)	100 (4)	75 (3)	NA
M-10.60 (M-4.24)	600 (24)	100 (4)	75 (3)	100 (4)	75 (3)	NA
M-15.15 (M-6.06)	150 (6)	150 (6)	50 (2)	150 (6)	50 (2)	NA
M-15.30 (M-6.12)	300 (12)	150 (6)	50 (2)	150 (6)	50 (2)	NA
M-15.45 (M-6.18)	450 (18)	150 (6)	50 (2)	150 (6)	50 (2)	NA
M-15.60 (M-6.24)	600 (24)	150 (6)	50 (2)	150 (6)	50 (2)	NA

GENERAL NOTES

The bottom slope of combination curb and gutter constructed adjacent to pcc pavement shall be the same slope as the subbase or 6% when subbase is omitted.

T = Thickness of pavement.

Longitudinal joint tie bars shall be No. 19 (No. 6) at 600 mm (24") centers in accordance with details for longitudinal construction joint shown on Standard 420001.

A minimum clearance of 50 mm (2") between the end of the tie bar and the back of the curb shall be maintained.

All dimensions are in millimeters (inches) unless otherwise shown.

DATE	REVISIONS
1-1-07	Switched to Hot-Mix
	Asphalt (HMA)
	terminology.
1-1-04	Revised expansion
	cap and soft converted
	metric reinforcement.

CONCRETE CURB TYPE B
AND COMBINATION
CONCRETE CURB AND GUTTER
(Sheet 1 of 2)

STANDARD 606001-03

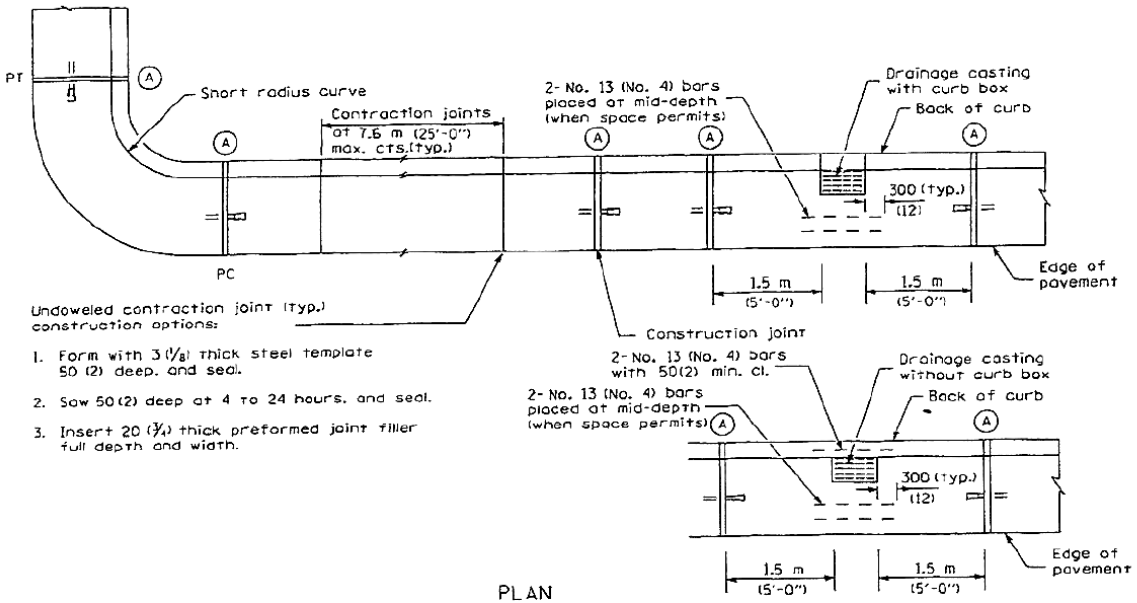

PLAN

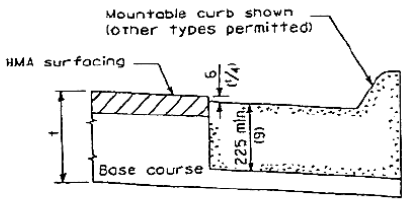

ON DISTURBED SUBGRADE

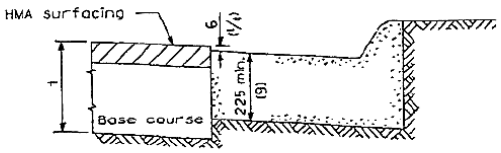

ON UNDISTURBED SUBGRADE

ADJACENT TO FLEXIBLE PAVEMENT

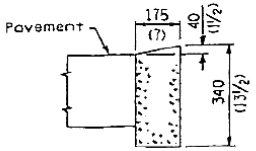

DEPRESSED CURB

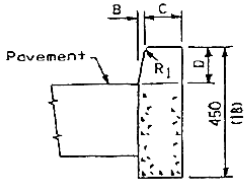

BARRIER CURB

ADJACENT TO FLEXIBLE PAVEMENT

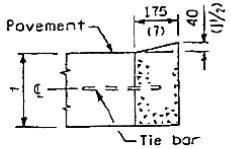

DEPRESSED CURB

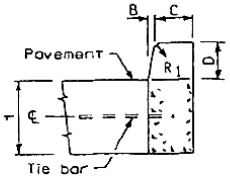

BARRIER CURB

ADJACENT TO PCC PAVEMENT OR PCC BASE COURSE

CONCRETE CURB TYPE B

All dimensions are in millimeters (inches) unless otherwise shown.

CONCRETE CURB TYPE B
AND COMBINATION
CONCRETE CURB AND GUTTER
(Sheet 2 of 2)

STANDARD 606001-03

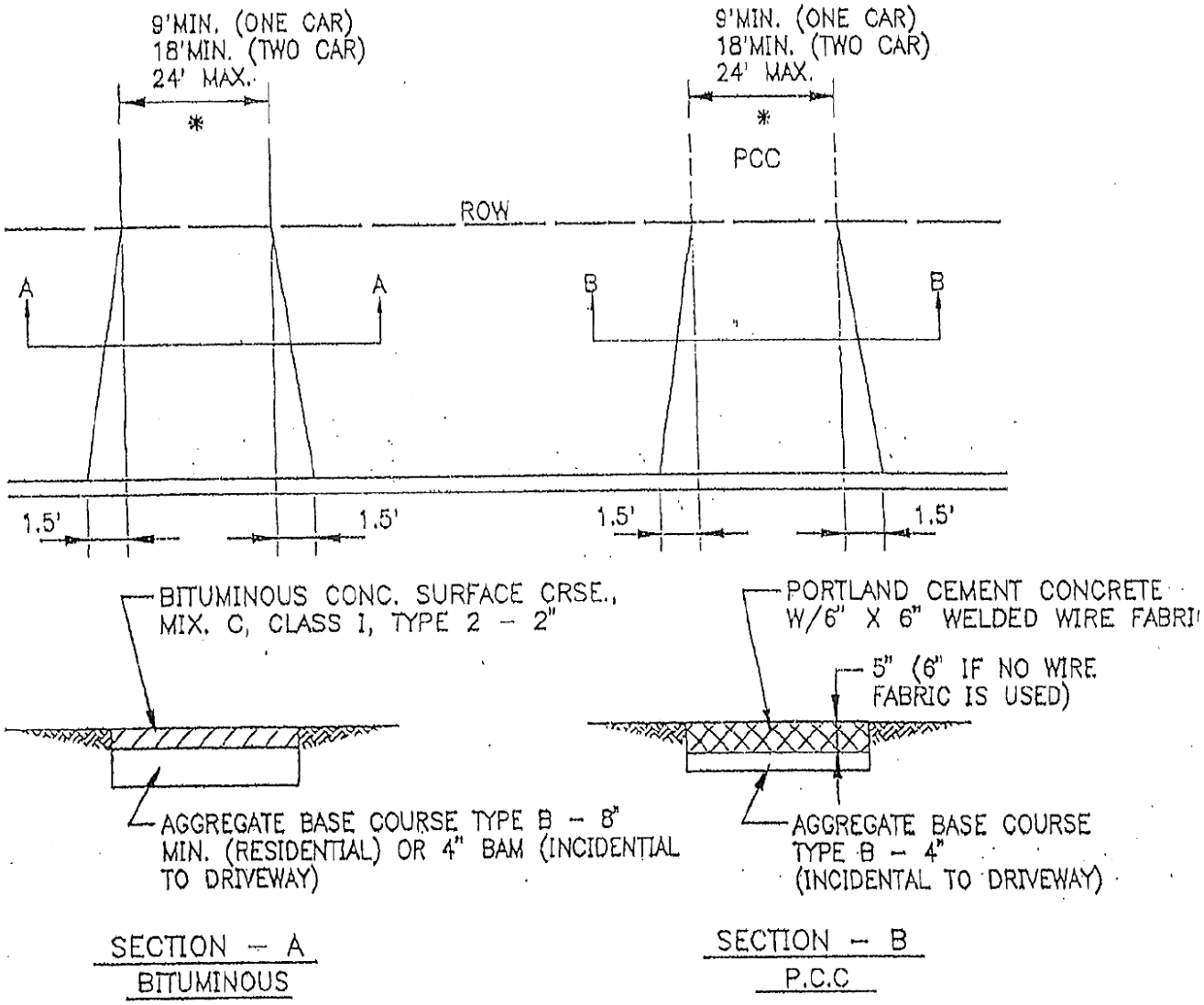

DRIVEWAY PAVEMENT DETAIL, RESIDENTIAL

*FOR THREE CAR GARAGES IN R–1 DISTRICT FACING STREET FRONTAGE, 32 FEET MAX. IS ALLOWED

Not To Scale

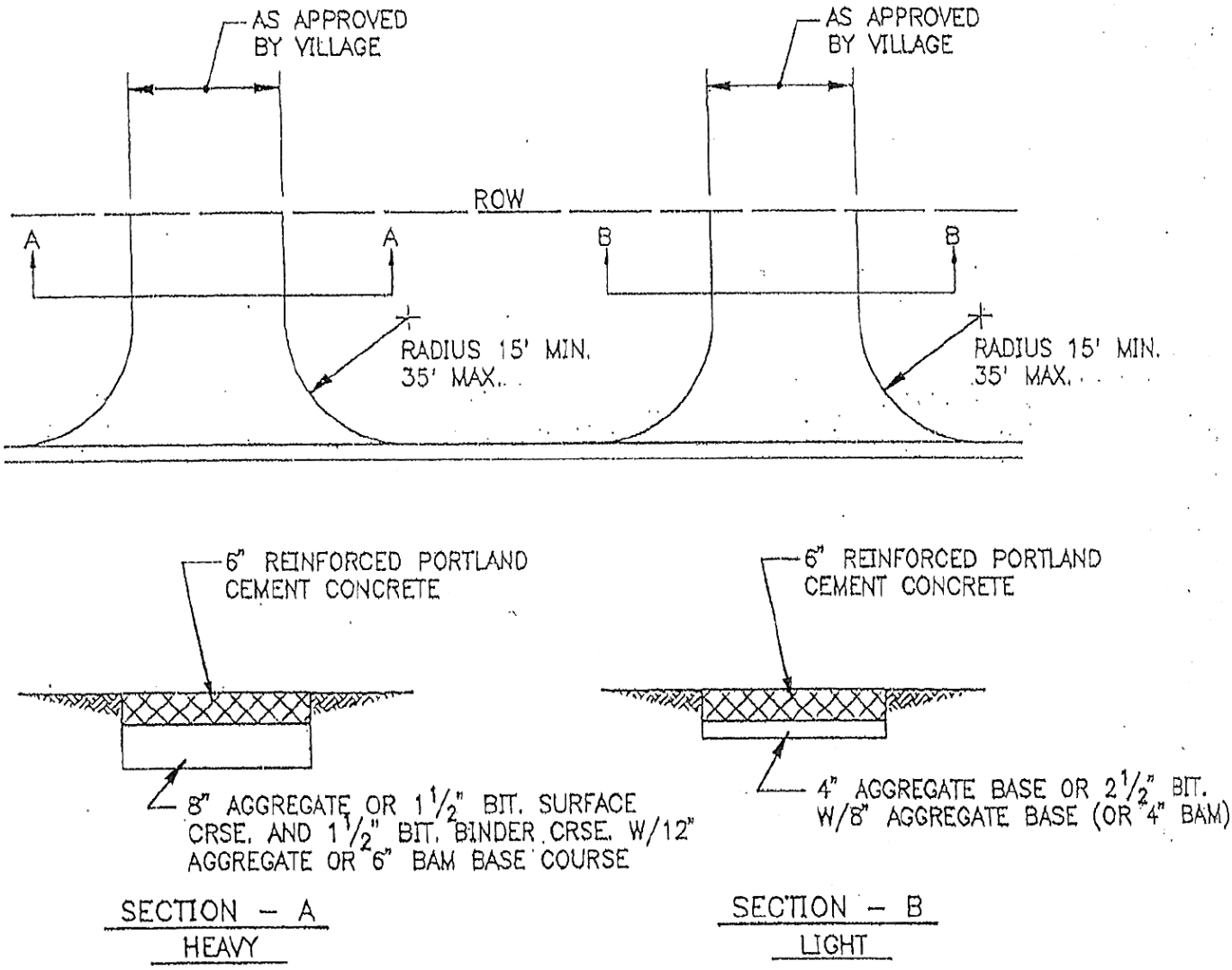

DRIVEWAY PAVEMENT DETAIL
COMMERCIAL/INDUSTRIAL

Not To Scale

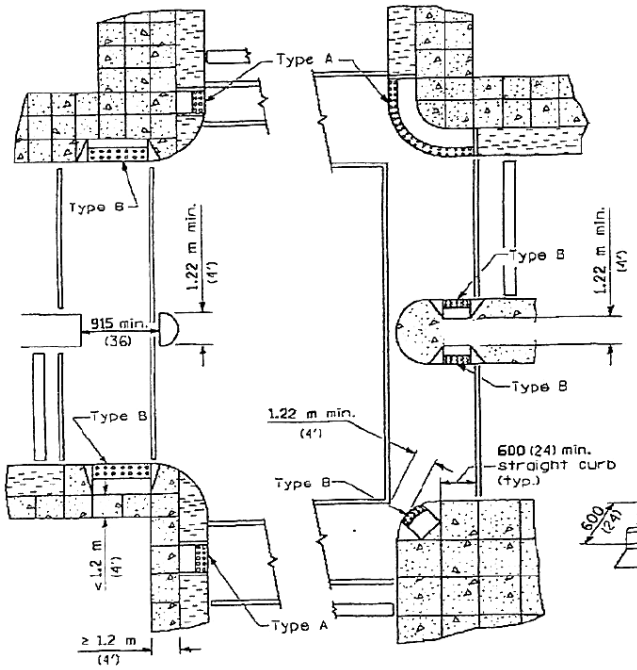

RECOMMENDED LOCATION OF RAMPS

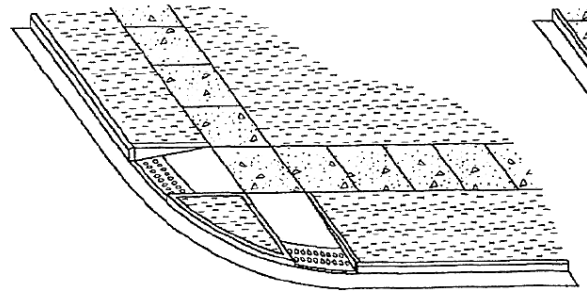

TYPE A RAMPS

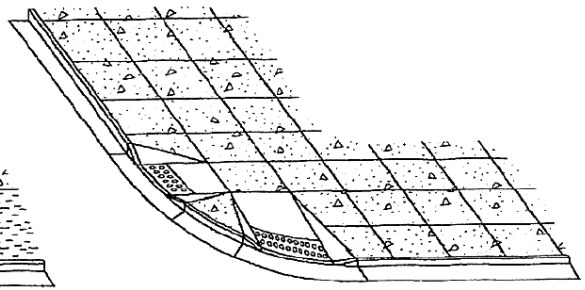

TYPE B RAMPS

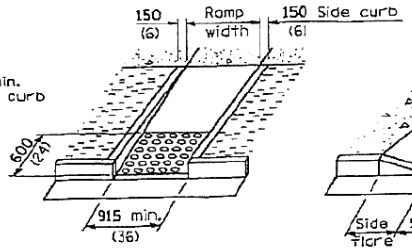

TYPE A

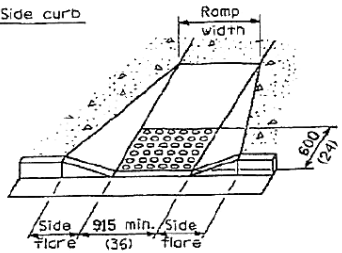

TYPE B

DETAILS OF RAMPS

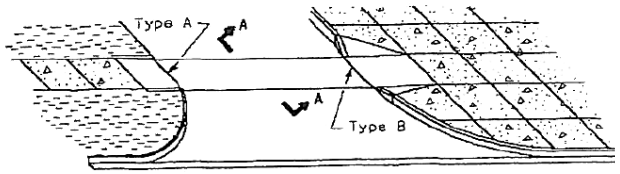

RAMPS AT ALLEYS OR ENTRANCES

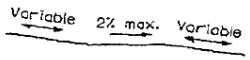

SECTION A-A

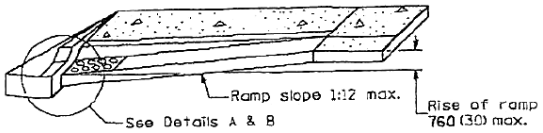

RAMP PROFILE

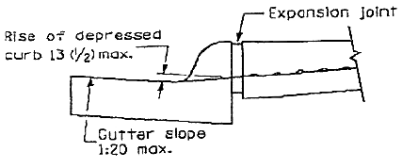

DETAIL A

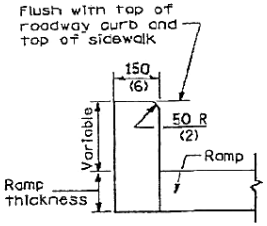

DETAIL OF SIDE CURB

(Side curb may be constructed monolithically with ramp)

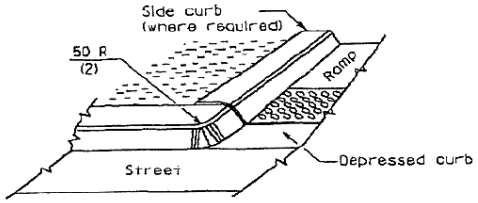

DETAIL B

LEGEND

- Sidewalk
- Ramp
- Detectable Warnings
- Non walking area

GENERAL NOTES

Detectable warnings shall be installed at curb ramps, medians and pedestrian refuge islands, at-grade railroad crossings, transit platform edges, and other locations where pedestrians are required to cross a hazardous vehicular way. Detectable warnings shall also be installed at alleys and commercial entrances when permanent traffic control devices are present.

The maximum slope of the side flare for Type B ramps shall be 1:10; however, if the width of the landing area between the top of the ramp and an obstruction is less than 1.2 m (4'-0") then the maximum slope shall be 1:12.

All slope ratios are expressed as units of vertical displacement to units of horizontal displacement (V:H).

All dimensions are in millimeters (inches) unless otherwise shown.

DATE	REVISIONS
8-1-05	Revised placement of
	detectable warnings
1-1-04	Added detectable
	warnings and changed
	title.

CURB RAMPS FOR SIDEWALKS

(Sheet 1 of 2)

STANDARD 424001-04

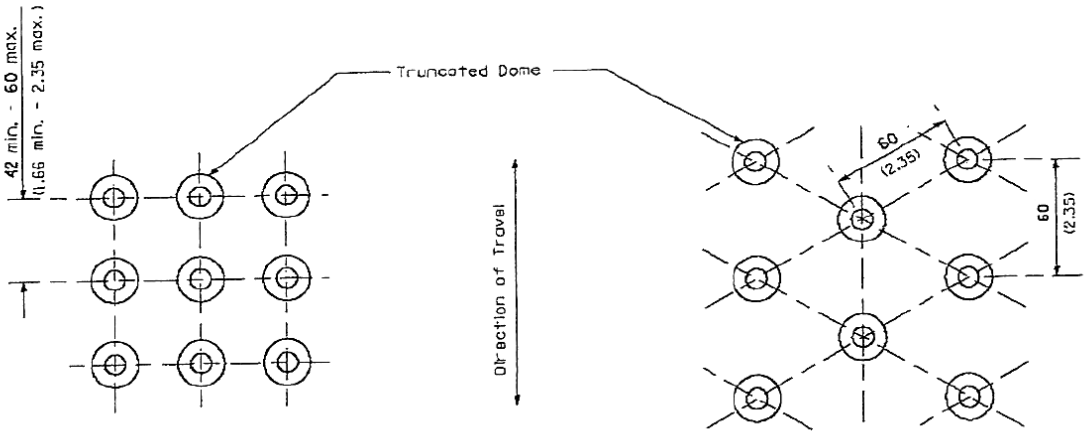

SQUARE PATTERN
(Parallel Alignment)

TRIANGULAR PATTERN

DETECTABLE WARNINGS DETAIL

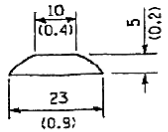

TRUNCATED DOME DETAIL

All slope ratios are expressed as units of vertical displacement to units of horizontal displacement (V:H).

All dimensions are in millimeters (inches) unless otherwise shown.

CURB RAMPS
FOR SIDEWALKS
(Sheet 2 of 2)

STANDARD 424001-04

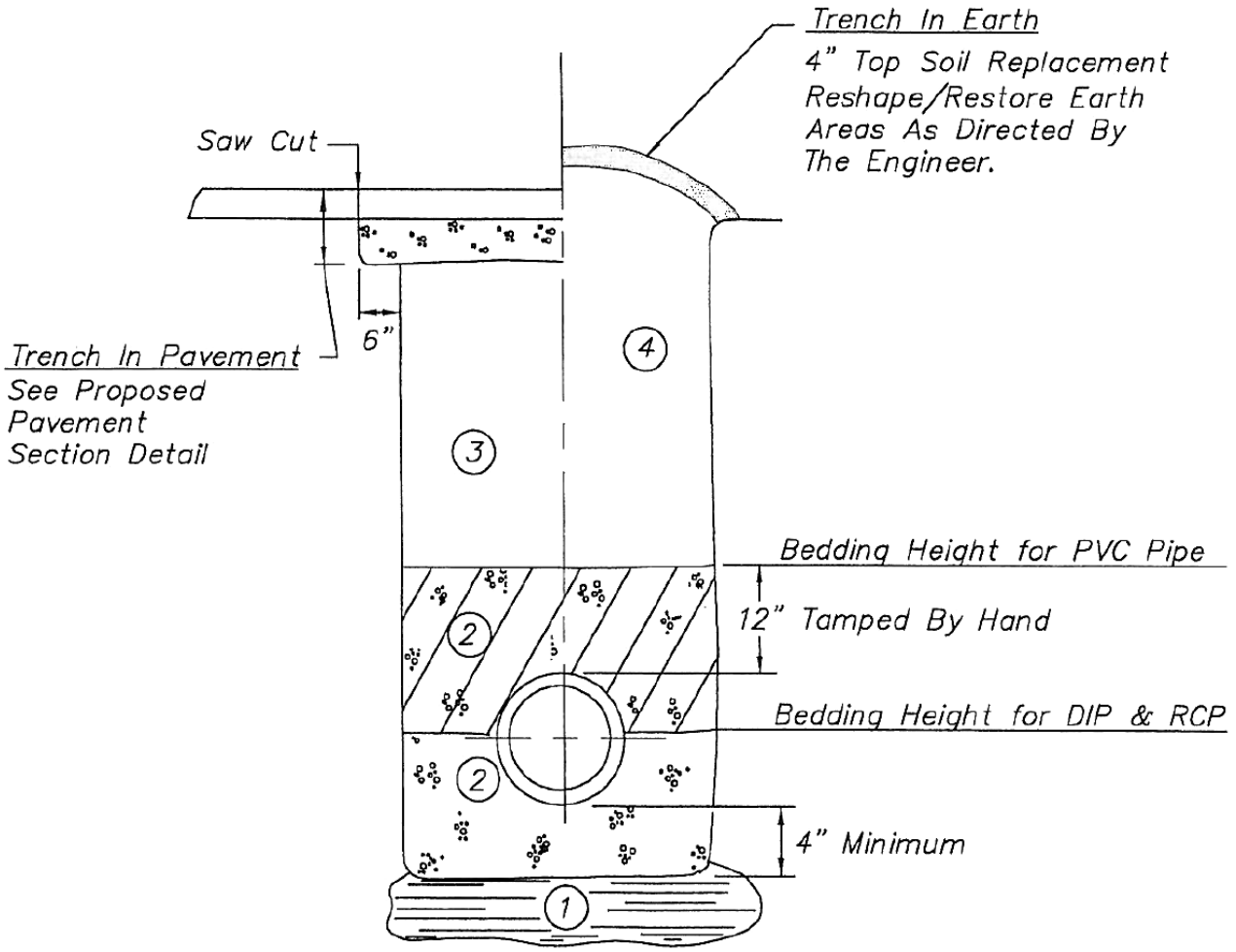

1. Unsuitable Material To Be Removed And Replaced With Porous Granular Embankment As Directed By The Engineer
2. Selected Granular Bedding (ASTM Base D2321, Class II) for PVC Pipe
   Coarse Aggregate, 1/4" – 3/4" Crushed for RCP and DIP
3. Trench Backfill (See Standard Specifications For Material And Compaction Requirements)
4. Approved Excavated Material

TYPICAL TRENCH DETAIL

Not To Scale

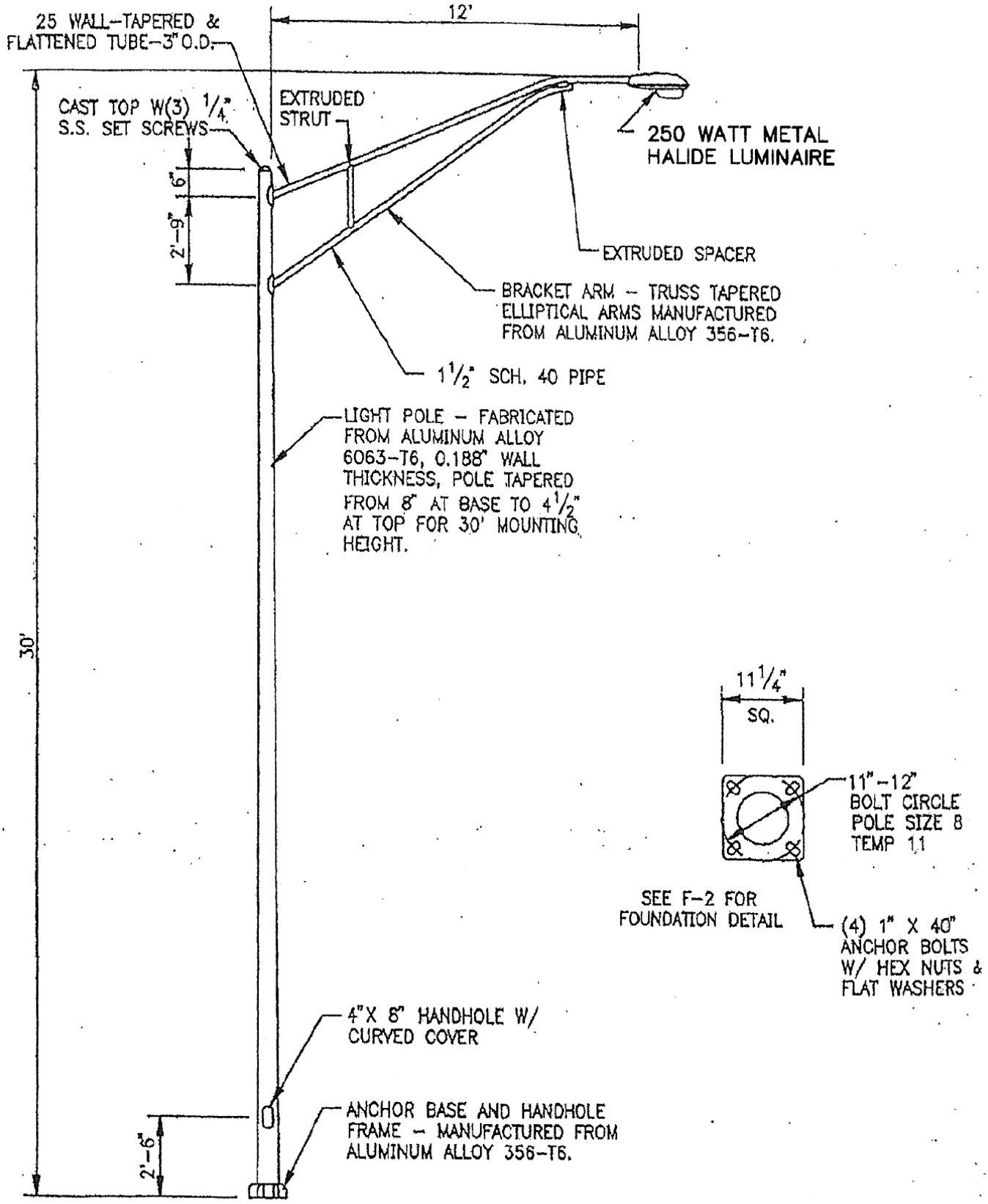

LIGHTING DETAIL

Not To Scale