Village of Wauconda Building & Zoning Department
109 Bangs Street, Wauconda, IL 60084
Phone: 847-526-9609 ~ Fax: 847-526-8967
E-mail: BZ@wauconda-il.gov
Permit Desk Hours:
Monday thru Friday ~ 8:00 am to 1:00 pm

Brick Patio or Walk Way Permit Requirements

- All patios require a permit. Permit fee is based on the estimated value of the project.
- A detailed drawing and material list must be submitted with the permit application.
- A plat of survey must be submitted showing the location of the proposed patio.
- Sedimentation control may be required.
- Homeowner Association approval may be required prior to permitting.
- If project includes electricity an electrical inspection is required
- If project enters the Village Right of Way (R.O.W.) a $500 refundable bond is required.
- See page two for typical specification drawings.

Brick/Paver Patio or Walk Way

TYPICAL CROSS SECTION

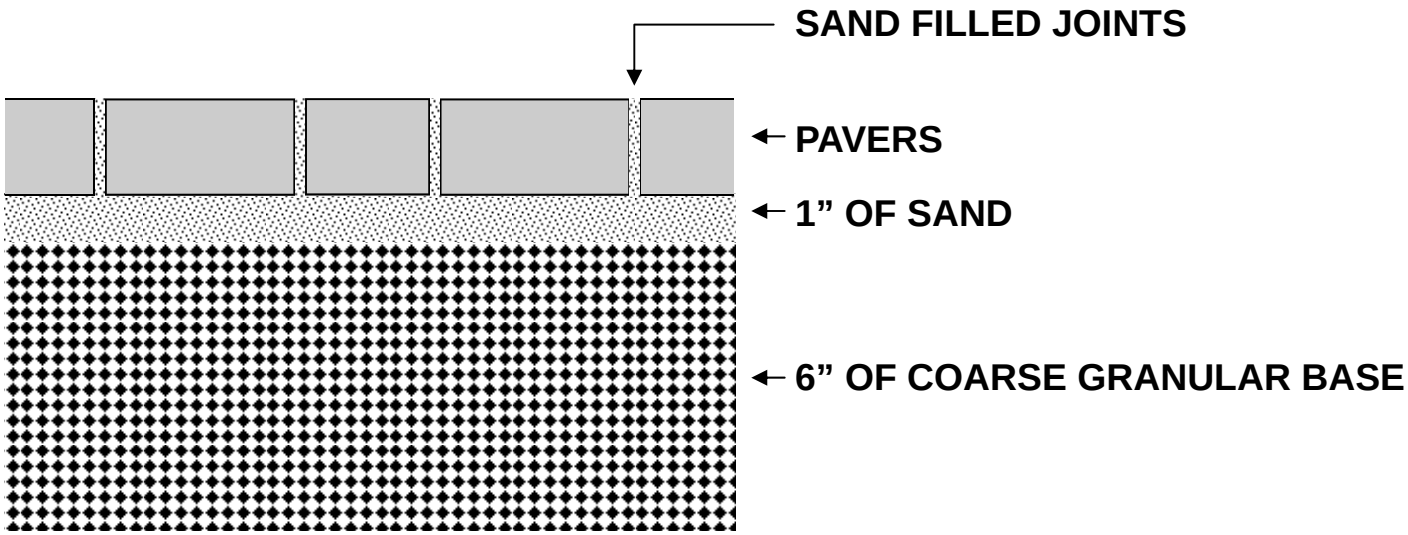

STATIONARY FIRE PITS: shall be built below grade with a minimum depth of 10” and surrounded on the perimeter of the pit by a non-combustible material with a minimum height of 10” above grade. Fire pit shall be a minimum of 15 feet from any structure.

STAIRS/STEPS:

The minimum tread depth shall be 10” measured horizontally between the vertical planes of the foremost projection of adjacent treads and at a right angle to the tread’s leading edge.

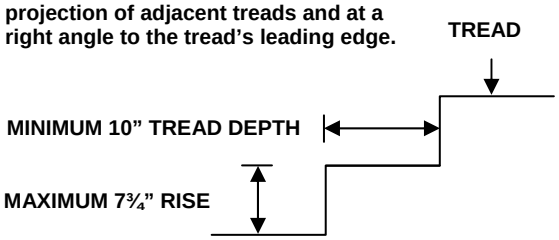

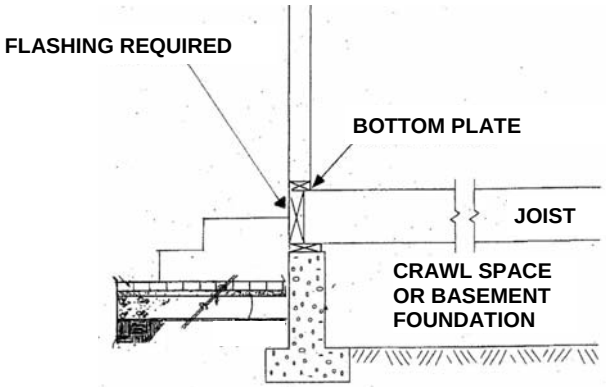

PATIOS ~ SEDIMENTATION CONTROL

1. When sedimentation control is required the inspection must be completed prior to any work commencing.
2. All construction materials and/or spoils placed in the Village Street or R.O.W. (Right of Way) must be cleaned up daily.
3. Contractor can not block or place debris on the sidewalk.
4. A refundable bond deposit may be required for potential damage to side walk, curb, or parkway.